L.2809.
4
R.E.T.C. LIBRARY
E.153
2809
KOVILPATTI.
CD662
2
CD 635
CD593/2

EXTENSION TRAINING

Refresher Course

PROBLEM ORIENTED

27, 20.8, 66

AGRICULTURE

SUBJECT MATTER

303
2
3

December 27, 1962—January 9, 1963

307.14
GoI
3228

Jointly Developed and Conducted by—

Government of India—Extension Directorate and
U. S. Agency for International Development

W.W.8.0.7.
4

R.E.T.C. LIBRARY
E.153.
2809.
KOVILPATTI.

THE PROBLEM ORIENTED APPROACH IN EXTENSION TRAINING

....

This is a report of joint Government of India and the United States Agency for International Development effort to organize and present a practical training demonstration based on actual problems of farmers. The plan and materials are reported in detail since this approach can be useful in future training activities.

December 27,1962 and January 9,1963.

Refresher Training Course
for
Assistant Development Officers

CD 593/2
CD 634

(Agriculture)
Presented at :
B. R. College
Bichpuri, U.P.

TABLE OF CONTENTS

1.	Summary	I
2.	Introduction	2
3.	Purpose	3
4.	Organization	3
5.	Syllabus	5
6.	Reference Materials and Equipment used in Training ...	9
7.	Pictures	55
8.	Evaluation	63
9.	Roster of Participants and staff	64

L. 2809.

R.E.T.C. LIBRARY
E. 153.
2809.
KOVILPATTI.

1. SUMMARY

1. This pilot training demonstration emphasized the co-ordinated use of subject matter, with the selection of appropriate extension methods through which to teach cultivators.

2. The training was successful as indicated by the enthusiasm of trainees and staff, the written comments of the trainees and group project reports. The reports show organized planning for the solution of identified soil and land management problems with a special reference to plant and crop production.

3. The staff of the Training Center started using this field and problem method of training in the extension courses for gram sevaks, panchayat secretaries and gram sevikas even before completion of the Bichpuri Course.

4. The period of training was too short to present basic information, carry out project planning, develop the necessary guides, and thoroughly discuss the plans with individual trainees.

This type of training should run throughout a course in place of being concentrated in a segment. Subject-matter information should be pointed to problems found in the area and limited to a few major crops.

5. The trainers from the college and extension centers, who assisted with the training picked up the system of training readily. However, a trainers training course using the major subject matter fields as a carrier should be initiated for all extension trainers. A short period of trainers training should be incorporated in all subject matter courses designed to improve ability to extend knowledge to others.

6. *For extending this type of training, there must be a period of transition sufficiently long to prepare adequate training guides, develop experienced and confident personnel and locate adequate training sites where problems have been identified and alternate potential solutions worked out by the technical training staff.*

7. If extension leaders in the Ministry of Food and Agriculture decide to use this approach to extension training—with the help of AID/Agriculture—careful organization and planning must precede any field work. A balanced national team of Indian and AID/Agriculture counterparts is required to carry out the entire project.

2. INTRODUCTION

The Directorate of Extension, in collaboration with the State Governments, has organized a number of training programmes for Extension Workers at different levels. One of the important programmes is the subject-matter Refresher Courses for Extension Officers (Agriculture and Animal Husbandry). These courses of one month duration are conducted at selected Agriculture, Veterinary Colleges and the Extension Education Institutes. Thirty Extension Officers who have 3 to 4 years of service in the field are called for training in a group.

Since the inception of this activity in 1958, steps have been taken to improve the subject-matter content and methodology of training. Although this training has proved useful in improving the professional competence of the field workers, it is believed that the training can be strengthened by using a problem and crop oriented approach.

Field workers are being called upon to make direct contributions in stepping up Agricultural production. This requires that subject-matter Refresher training should be reoriented so that it has a direct bearing on the field problems and thereby makes a direct contribution in increasing food production.

Pursuant to the foregoing objective, a series of meetings were held between the officers of the Government of India and USAID, and it was decided that an intensified problem oriented approach should be included for a period of one week in the subject-matter Refresher Course in Agriculture organized at B.R. College, Bichpuri (Agra). The details regarding this special training and its impact on the participants are given in the following pages.

R.E.T.C. LIBRARY
KOVILPATTI.

3. PURPOSE

The application of technical subject matter and extension teaching methods to specific problems of farmers is recognized as an area of training for extension personnel that requires strengthening. This unit was developed as a demonstration in applying the problem approach to actual village situations. Participants were given an opportunity to take part in the various activities included in this training unit.

The syllabus included field problem identification, relevant technical subject matter, extension methods, and field work in which participants were required to apply the knowledge gained. After observing the training staff demonstrate the various skills and procedures, each participant repeated them so that he gained the necessary confidence and ability to be an effective teacher.

4. ORGANIZATION

As originally planned, the refresher course covered one month of training from December 17 to January 16. This unit was presented during the periods of December 27 and January 2 to 9.

The following points are considered to be important in reporting the organizational aspects of this activity.

a. The group consisted of 23 participants; 8 instructors from Extension Training Centres; 14 Agricultural Development Officers (block staff); 1 Senior Scientific Assistant, Soil Conservation Research Centre.

b. In advance of the teaching dates, A.I.D. technicians visited Bichpuri to make the following arrangements: (1) discuss the proposal with the college staff, obtain approval, and work out joint assignments; (2) visit three nearby villages... Chohatna, Nagla Pati Ram, and Bichpuri...to explain the plan for using the village as a laboratory and to obtain permission to do so from the village leaders. Soil and water samples were taken. Arrangements were made to construct simple land forming equipment. Availability of other items needed in teaching was checked.

c. Method of training consisted of :

...discussion and identification of soil and land problems in three selected village areas;

...discussion of production problems as related to soil conditions with field identification;

...alternate solutions to these problems, practices which could be used, and the planning of practices to be used;

...identification of area to be covered;

...Extension methods to be used and demonstrations to be conducted.

d. Training by subjects and time allocations :

1. Review of extension teaching methods. This included (a) consideration of

five different levels of knowledge and interest among cultivators in the production practices being recommended and (b) selection of the extension teaching methods which might be most effective at each level. Participants worked out a grouping of extension teaching methods for each level.

During later discussions of the various subject-matter phases, repeated references were made to this grouping in relating extension teaching to the problem at hand. Time allocated : One half day.

Discussion leaders : James E. Crosby, Extension Advisor, U.S.A.I.D.
Shri G. S. Baweja, Senior Extension Officer, Directorate of Extension, Min. of F & A.

2. Soils study :

Time allocated : Two days

Conducted by : M. H. Taylor, Soils Advisor, U.S.A.I.D.

This included soil profile and characteristics in relation to plant growth such as depth, texture, surface and subsurface soil drainage, pointing out the need for proper air, water and nutrient relationship. Visits were made to soil pits. Trainees were instructed in the use of soil augur and indentification characteristics. The group was divided into three sections and each assigned a village area to survey.

3. Soil nutrients :

Time allocated : One and one half days.
Conducted by : Myron G. Smith, Soils (Fertilizer) Advisor, USAID.

This included nutrient removal by plants, fertilizer application with or without soil tests, availability of nutrients, application and placement of fertilizers, field trip to identify deficiency symptoms, plant population and cultural practices.

4. Seed germinatian :

Time allocated : One and one half days.
Conducted by : Sardar Singh, Extension Training Centre, Bichpuri (Agra)
James E. Crosby, Extension Advisor, USAID.

This included seed germination testing by use of rag doll, pot and plate methods. Participants were assigned various lots of seeds for making germination tests. Methods of adjusting seeding rate on basis of tests were discussed.

Requirements of a good bed were included.

5. Land preparation and water application :

Time allocated : One and one half days.

Conducted by : Jack A. Griffin, Agricultural Engineer (Irrigation), USAID
Donald J. Minehart, Irrigation Farming Advisor, USAID
Harold M. Jones, Farm Equipment Advisor, USAID

Subjects included were land levelling, infitration rates, determining water supply and demonstration of the foregoing.

After discussion of water holding capacity in relation to texture and soil characteristics, the trainees observed and assisted in levelling an area and determining the infiltration rate; also determined the area and time that water should be applied to the land. Actual irrigation of border strip and furrow strip was carried out.

6. Pest control and village lands planning :
   Time allocated : One half day
   Practices and demonstrations were included.
7. Planning needs :
   Time allocated : One half day
   Development of maps and charts for presentation of problems, practices, operations, demonstrations and maintenance were used.
8. Increasing Food production :
   Time allocated : One half day
   Presentation of project by trainees and discussion of problems and practices selected for increasing food production. The session closed with a review of activities and various extension methods which could and should be applied.

5. SYLLABUS

The following outlines were used in presenting the problem oriented training unit. The first session was devoted to identifying soil and land problems and the related production problems. Solutions to the various problems were the focal points of discussions which included the application of subject-matter and extension methods.

Schedule of Presentation and Content *December 27, 1962 :* The teaching outline included below provides a means of identifying key problems that must be reckoned with in increasing Agricultural Production.

I. Objective : To assist cultivators in "X" village make the maximum increase in their crop production during this season.

II. Identify the most important crop : What problems limit yield ? What changes can cultivators make which will increase this crop this year ?

III. What do you recommend to solve this problem ?

1. What practices ?
2. What materials ? Availability ?
3. What equipment ? Availability ?
4. What production methods ?

IV. How do you proceed ? *Start with people where they are.* Where are the cultivators ?

1. In the village—or in the fields (*physically*)
2. In level of *knowledge* about each problem or solutions
   a) No knowledge
   b) Have heard — no interest

c) Have heard — want information
d) Believe — want help — skills, supplies, availability etc.
e) Are using the recommended practices now

V. What is situation in this village ?

1. Knowledge about the problem ? Groupings refer to headings listed under IV sub-head 2.
   a) ....number of cultivators
   b) .... ,, ,, ,,
   c) .... ,, ,, ,,
   d) .... ,, ,, ,,
   e) .... ,, ,, ,,
2. Village social groupings.
   Village economic groupings (by size of farm, etc.)
3. Local leaders among cultivators—by name (not necessarily political nor official —not usually labelled "leader"—not same person for all groupings).

VI. What Extension Teaching Methods will you use ?
How ?
When ?
Why ?
(Outline for each major recommendation)

January 2, 1963

I. Soil and land condition.	
A. Physical Characteristics—Depth—Texture—Drainage—(Surface—Subsurface)—Slope—Degree of Erosion.	Simple Soil Map, Soil Pits in Representative Areas.
B. Chemical Characteristics, Soil tests—Problems to be identifiedand rated on the degree of intensity and indicated as degree of limitation on crop production. Demonstration on· profile and characteristics investigation.	pH, N.P.K. of representative samples
II. Present land use :—	Use of charts showing change in crop and production.
A. Cropping sequence and level of yield—	
B. Land of non-productive character—Identification of soil and land production characteristics.	
III. Soil and land Tour—Field—Demonstration of review of soil features and identification of problems—Erosion—soil loss and accumulation. Example restricting layers in profile and effect of cropping practices. Effect of structure determination fertility indications. Profile identifications by auger, spade or tube.	Soils—Crops — Chaulk water—Hcl. acid—Soil probe, Soil sample with good structure.

January 3, 1963

I. Soil and land tour—field—Complete villages. Extension methods of handling people and presenting information.

II. Project assignments—
Assign groups and individual teams to area for development and planning of practices :

Divide groups—equal numbers to each village. Divide into teams of 2-3 trainees each and assign one or more cultivators to each team.

Instructions to each team regarding decisions of the cultivators as arrived at by discussion of specific alternatives. Report due—January 9—*Presentation* before groups.

Justification—based on solution of specific problems both physical and economic.

January 4, 1963

Subject	Time	Object
Economics of fertilization (Under good management)	8-9 A.M.	To arouse awareness in ADOs of the potential for increased earnings on the same acreage of land.
Soil testing		To establish a base from which to start a fertility program.
Tissue testing and visual symptoms		To give the ADO something practical that he can use with the cultivator to supplement the soil test.
Balance sheet of fertility by crops and rotation	9-10 A.M.	To establish the needs of each crop. Illustrate why not all crops require the same recommendation. Why rotations vary in their nutrient needs and time of application.
Making the fertilizer recommendation considering soil tests and crop requirements.		The final practical package of fertility needs.
Various Nitrogen Carriers	10-11 A.M.	To acquaint the ADOs with the NH_3 and NO_3 sources and to discuss the properties of the new carriers.
Various Phosphate Carriers		Comparison Super-phosphate, Triple Superphosphate and mixed fertilizers.

Various Potash Carriers	11-12 A.M.	Particular emphasis on Muriate of Potash and Potassium Sulphate.
General recommendations for Jowar, Bajra, Paddy, Maize and Sugarcane		Based on general information of local field trials.
Field trip— Factors to be observed 1. Visual evidence of fertility variation. Example : Dark green for high nitrogen Light green for low nitrogen. 2. Plant population (stand) 3. Variation in rate of growth —Unevenness 4. Tilth (Try to locate difference) 5. Varietal difference 6. Salinity 7. Irrigation 8. Crop selection and dual cropping	1-4 P.M.	To acquaint ADOs with conditions they will actually encounter and discuss methods of diagnosis and recommendations.
January 5, 1963		
Compost culture (Dung Compost)	8-9 A.M.	Storage — Layering — Moisture Control and Supplementation.
Manure Compost		Storage — Layering — Moisture Control and Supplementation with emphasis on higher need for nitrogen on carbon aceous material.
General discussion of fertility and inter-relate fertility with other practices—Variety—Weed control—Water management and conservation—good cultural & tillage practices—finance.	9-10 A.M.	Clear the air in frank discussion—Attempt to create *confidence* in ADO in general recommendation and make him aware that exact yield response cannot be projected — Nature is not exact in its conditions.
Extension methods in cultivator contacts	10-11 A.M.	Acquaint ADOs with the tools available to do the job of education.

January 7, 1963

I. Demonstration of Practices :

Selection of those practices which will have effect on immediate increase in production and the practices which will be of value in the next crop :

1. Fertilizer—Method of application and placement :
   Example : Broadcast of Non-growing crop—Spread sand on surface to demonstrate uniform application.
2. Seed testing—determining percentage of germination and adjustment of seeding rates.
3. Breaking of surface seal.
4. Planting methods—spacing, depth, fanning etc.
5. Land levelling.
6. Plant protection measures.

II. Selection of Demonstrations :
Determine what will be demonstrated that will give response and conduct the selected demonstration.

January 8, 1963

I. Selection of Demonstration (continued)

II. Seminar on subject matter—
staff available for consultation in all subject matter fields.

III. Finalize crop production practices to be used for assignment.

January 9, 1963

I. Presentation of Project before Group—
Covering all methods applied to solve specific problems and within means and ability of cultivator. List problems which need group action or outside help and give some indication of manner in which problem might be solved.

II. Summary by Trainees and Staff—
Review of procedure and application to other areas of the basic principles learned and applied in this training. Review of all the extension methods used and observed. List subject matter material you still *need* to know to do the production job.

6. REFERENCE MATERIALS AND EQUIPMENT USED IN TRAINING

Mimeographed and ditto technical materials were provided for instruction and reference. Also soil augers, small handlevels, materials for seed germination testing, materials for developing charts and maps for project presentation were made available.

One set of equipment was supplied for training and use in the villages to do land levelling, smoothing and making of drainage and irrigation ditches on a demostration basis.

In all instances a counterpart and interpreter were used in order to follow up and demonstrate the method used.

The construction of simple bullock land forming and levelling equipment was demonstrated to the shop and farm staff. This was used in the field demonstration. A method of determining soil infiltration rate with concentric infiltration rings in which the trainees recorded the data and determined the rate was demonstrated.

Articles supplied by A. I. D.

To each individual

Handbook of Agriculture, ICAR
Soils Book, Successful Farming

Soil sampling auger
Hand level
Soil and Land Management Notes, M.H. Taylor
Instructions and reference materials, Subject
Matter (Copies attached)

To Extension Training Centre, B. R. College

Home made equipment for land forming.

IN SUPPORT OF TEACHING

a. Increasing Agricultural Production. This outline was used in problem identification, situation appraisal and extension methods selection.

b. Effective Extension Teaching Methods. This illustrates the suitability of various extension methods where cultivators are at different levels of knowledge.

c. Evaluation sheet. Each course participant was asked to list and discuss the suitability of the various extension methods in obtaining acceptance by villagers of the recommended practices.

d. Quiz given participants. The quiz was given Jan. 2 at the beginning of the unit. Answers to Questions are included in the text material for the unit. They are inserted in the spaces provided on the quiz form for the benefit of the users of this report.

e. Summary of replies to quiz questions. The wide range of replies reflects the level of knowledge of the course participants at the beginning of the unit with no advance information about the quiz.

f. Project Assignment. Each participant was assigned to a team and in an area to investigate the problems and make recommendations for solving the problems.

g. Soil profile description.
h. Guide for judging how much moisture is available for crops.
i. Soil structure.
j. Results from simple fertilizer trials—Paddy
k. Results from simple fertilizer trials—Wheat
l. Nutrient removals from representative rotations common to the area.
m. Formula for Fertilizer Recommendations—Typical prescription for 100 bushels maize.
n. Nutrients removed by different crops.
o. Results from 37 complete fertilizer trials in 13 states on maize by ICAR.
p. Good seed of improved varieties needed eveiy year.
q. Cropping system.
r. Organic matter.
s. Land forming.
t. Furrow irrigation.
u. Job sheet on graded border strip lay-out.
v. Job sheet on contour border strip lay-out.
w. Optimum time for watering.
x. Ditch construction.
y. Soil and land management.

INCREASING AGRICULTURAL PRODUCTION

(Proposed approach by Ministry of Food & Agriculture and A.I.D./India)
Teaching Outline for field training of Indian field staff

I. Objective : To assist cultivators in "X" village make the maximum increase in their crop production during this season.

II. Identify the most important crop
What changes can cultivators make which will increase this crop this year ?
What problems now limit yield ?

III. What do you recommend to solve this problem ?
1. What practices ?
2. What materials ? availability ?
3. What equipment ? availability ?
4. What production methods ?

IV. How do you proceed ? "Start with people where they are."
Where are the cultivators ?
1. in the village—or on the field (*physically*)
2. in *knowledge* about each problem or solutions
   a) no knowledge
   b) have heard—no interest
   c) have heard—want information
   d) believe—want help—skills, supplies, availability, etc.
   e) are using the recommended practices now

V. What is situation in this village ?
1. knowledge about the problem ?
   a)...............number of cultivators
   b) ....
   c) ....
   d) ....
   e) ....
2. village social groupings
   village economic groupings (by size of farm, etc.) ?
3. local leaders among cultivators—by name, (not necessarily political nor official —not usually labelled "leader"—not same person for all groupings.)

VI. What Extension Teaching Methods will you use ?
How ?
When ?
Why ?
(outline for each major recommendation)

EFFECTIVE EXTENSION TEACHING METHODS

Stage of Knowledge	1 Number of Cultivators	2 Exhibit	3 Lecture Meeting	4 Group Discussion	5 News Article	6 Radio	7 Method Demonstration	8 Result Demonstration	9 Farm Visit	10 Neighbors	11 Bulletins	12 Visuals			
No Knowledge		×				×		×	×	×		×			
Has Heard—No Interest		×				×		×	×	×		×			
Interested—Wants Information			×	×	×		×	×	×	×	×	×			
Believes—Wants Help, Materials, Skills			×	×			×		×			×			
Has Adopted				×					×		×				

Evaluation Sheet

Please mention against each the extension method which you will follow for the undernoted practices to be accepted by the villagers.

1. Use of improved agricultural implements
2. Use of fertilizers
3. Use of water for proper irrigation
4. Use of improved seeds
5. Planting seeds in lines
6. Use of a mechanical spray

Was each mentioned in your talk ? What and where ?

Name______________________________

Designation______________________________

QUIZ GIVEN PARTICIPANTS ON JAN. 2

Name____________________

Extension Training—Subject Matter—Bichpuri

1. What is Soil ?

The mineral plus organic portion of the earth's surface capable of supporting plant life.

2. In the average soil what is the Percent of each of the following :

1. Mineral (48)
2. Air (20)
3. Organic Matter (2.0 %)
4. Water (30)

3. What are Three Forms of Soil Structure ?

1. *Columnar* 2. *Blocky* 3. *Platy*

4. What is Soil Texture ? (% of sand, silt & clay)

5. List What You Know about a normal Soil if You Know its Texture.

1. (Workability)
2. (Water holding capacity)
3. (Infiltration)
4. (Water holding capacity)

6. To What Depth do wheat Roots Feed ? (*36—48*) inches

7. Give the Percent of Humidity in Soil Air (*85—100%*)

8. What is the weight of Bacteria & Animal life in a Soil Producing 40 mds. of Wheat ? (*3—4000*) pounds

9. What Does Soil Color Indicate ? (*Drainage*) or (*color from percent material*)

10. On the Reverse Side, List Ten (10) Uses of Farm Yard Manure or Compost.

SUMMARY OF REPLIES TO QUIZ GIVEN ON JAN. 2

2. In the Average Soil What is the Percent of each of the following :

Mineral

50-60%	45	10	40
45	45	35	82
35	20	25	30
65	48	58	48
45	46	48	20

Organic Matter

1-2%	10	10	10
30	5	10	5
8-10	30	30	20
20	30	2	2
2-3	4	2	27

Air

25-30%	35	42	30
10	25	40	—
25	10	25	20
10	12	20	20
20	20	20	23

Water

15-20%	10	30	20
15	25	15	10
30	40	20	30
5	20	20	30
30	30	30	30

3. What are Three Forms of Soil Structure ?

Columnar	Compact	Compact
Prismatic	Single	
Granular		Cylindrical or of any other shape
Clay	Silt	Puddled
Sandy	Loam	
Coarse	Medium	Fine
	Triangular	Square
		Sandy Loam

6. To What Depth do Wheat Roots Feed ?

6-9″	3-5	12-68	12-18
6	4-6	6	28-30
9	10	3-4	20-30
4	6-8	6-8	8
6-9	10	6-8	6-9
6-9	4-6	—	—

7. Give the Percent of Humidity in Soil Air :

80-90%	About 25	—	40-50
10	10	60-90	45
30	40-60	50	40-60
40-50	10	50-75	—
30	30	20	30
30	10	—	—

Project Assignment

on.................Land

Team. No................., Group No...............

You and Your team-mate have been assigned Area No........................... in Village...............................

Investigate the soils in the area and prepare a soil proforma where characteristics or land features differ. Determine cropping sequences and present land management and cultural practices used. Identify limiting factors of production.

Prepare recommendations and alternatives for improving crop yields in your area. Develop a time table of operations.

With your group, develop a schedule of demonstrations you would carry out in the Village.

SOIL PROFILE DESCRIPTION

Area... Collector...

Plot No. or Location............................ Date...

Crop... Weather & Condition.............................

Depth | Illustrate | Notes

Surface | | Subsoil

.... Color ....

.... Texture ....

.... Drainage ....

.... Effective depth ....

Other physical condition, e.g., soil pans, salinity, water logging, stoniness, kankar (depth, cementation, thickness).

Legend – Color—Gray, Black, Yellow, Brown, Red

Texture	*Structure*	*Drainage*	*Effective Depth*
1 Very heavy	Granular	1 Very poorly	1 Very Deep — 60″ & over
2 Heavy	Blocky	2 Poorly	2 Deep — 36″ — 60″
3 Medium	Platy	3 Moderate	3 Moderate — 20″ — 36″
4 Light	Massive	4 Well	4 Shallow — 10″ — 20″
5 Very light	Single Grain	5 Excessively	5 Very shallow - 0 — 10″
		6 Droughty	

GUIDE FOR JUDGING HOW MUCH MOISTURE IS AVAILABLE FOR CROPS

Available soil moisture remaining	Feel or appearance of soil			
	Very light texture	Light texture	Medium texture	Heavy texture
0 to 25 percent.........	Dry, loose, single grained, flows through fingers	Dry, loose, flows through fingers	Powdery dry, sometimes slightly crusted but easily broken down into powdery condition	Hard, baked, cracked, sometimes has loose crumbs on surface.
25 to 50 percent.........	Appears to be dry, will not form a ball with pressure.	Appears to be dry, will not form a ball.*	Somewhat crumbly but holds together from pressure.	Somewhat pliable, will ball under pressure.*
50 to 75 percent	Appears to be dry, will not form a ball with pressure.	Tends to ball under pressure but seldom holds together.	Forms a ball somewhat plastic, will sometimes slick slightly with pressure.	Forms a ball, ribbons out between thumb and forefinger.
75 percent to field capacity (100 percent)	Tends to stick together slightly, sometimes forms a very weak ball under pressure.	Form weak ball, breaks easily, will not slick.	Forms a ball, is very pliable slicks readily if relatively high in clay.	Easily ribbons out between fingers, has slick feeling.
At field capacity (100 percent)	Upon squeezing, no free water appears on soil but wet outline of ball is left on hand.	Upon squeezing no free water appears on soil but wet outline of ball is left on hand.	Upon squeezing, no free water appears on soil but wet outline of ball is left on hand.	Upon squeezing no free water appears on soil but wet outline of ball is left on hand.
Saturated	Water appears on ball & hand.	Water appears on ball & hand.	Water appears on ball & hand.	Water appears on ball & hand.

* Ball is formed by squeezing a handful of soil very firmly.

Soil Structure

Soil structure is very important in soil drainage since the rate of movement of water depends upon the ease with which it can percolate through the soil.

Platy type structure effects the downward movement of water and may hold too much water for good root growth and development. It is usually found in connection with clay and the development of clay pans.

Puddling is an attempt to destory soil structure to prevent movement of water in paddy fields, but is usually harmful in production of other agricultural crops.

Crumb and granular structure which are forms of blocky structure make for good tilth and workability and production of good seed beds.

Sands do not develop strong structure since they are single grain and can only be bound together with organic matter and roots. In single grain structure there is usually a droughty condition because of rapid percolation and presence of too much air.

Poor structure can have a very adverse effect on plant growth and be a cause of lack of response to fertilizer application.

Soils tend to develop structure in undisturbed conditions based on compositon.

Structure is effected by :

Ploughing, cultivation and trampling, wetting & drying plant roots and soil animals
Decaying organic matter
Presence of excess acids or basis.

In soils where structure is a problem in production, attention needs to be paid to each operation of soil working and plant management to give maximum opportunity for structure development and maintenance.

RESULTS FROM SIMPLE FERTILIZER TRIALS BY ICAR WITH PADDY (1953-56)

(Percentage net return on investment is given in brackets)

Fertilizer Treatments	No. of expts.	Cost of fertilizers (Rs.)	Response md./acre	Value of response at paddy prices (Rs./md.)		Net profit per acre at paddy prices (Rs./md.)	
				12	14	12	14
20 lb. N	1,596	17	4.5	54	63	37 (218)	46 (271)
40 lb. N	780	34	6.6	79	92	45 (132)	58 (171)
20 lb. P_2O_5	860	15	3.6	43	50	28 (187)	35 (233)
20 lb. N + 20 lb. P_2O_5	1,784	32	6.6	79	92	47 (147)	60 (188)
40 lb. N+20 lb. P_2O_5	965	49	7.9	95	111	46 (94)	62 (127)
20 lb. N+40 lb. P_2O_5	674	47	7.8	74	109	47 (100)	62 (132)

Cost of 20 lb. N as Am. sulphate @ Rs. 385/- per ton = Rs. 17.

Cost of 40 lb. N as Am. sulphate @ Rs. 385/- per ton = Rs. 34.

Cost of 20 lb. P_2O_5 as Superphosphate @ Rs. 275/- per ton = Rs. 15.

Cost of 40 lb. P_2O_5 as Superphosphate @ Rs. 275/- per ton = Rs. 30.

Cost of fertilizers includes transport charges as well.

All calculations have been corrected to the nearest rupee.

RESULTS FROM SIMPLE FERTLIZER TRIALS BY ICAR WITH WHEAT (1953-56)

(Percentage net return in investment is given in brackets)

Fertilizer treatments	No. of expts.	Cost of fertilizers	Response md./acre	Value of response per acre when 1 md. wheat is sold at		Net profit per acre when 1 md. wheat is sold at	
				Rs. 16	Rs. 18	Rs. 16	Rs. 18
20 lb. N ...	1,191	17	3.0	48	54	31 (182)	37 (218)
40 lb. N ...	832	34	4.7	75	85	41 (12)	51 (150)
20 lb. P_2O_5 ...	634	15	2.3	37	41	22 (147)	26 (173)
20 lb. N+ 20 lb. P_2O_5 ...	1,229	32	4.2	67	76	35 (109)	44 (133)
20 lb. N+ 40 lb. P_2O_5 ...	398	47	5.2	83	94	36 (77)	47 (100)
40 lb. N+ 20 lb. P_2O_5 ...	760	49	5.9	94	106	45 (92)	57 (116)

Cost of 20 lb. N as ammonium sulphate at Rs. 385/- per ton...Rs. 17

Cost of 40 lb. N as ammonium sulphate at Rs. 385/- per ton...Rs. 34

Cost of 20 lb. P_2O_5 as superphosphate at Rs. 275/- per ton...Rs. 15

Cost of 40 lb. P_2O_5 as superphosphate at Rs. 275/- per ton...Rs. 30

NUTRIENT REMOVALS FROM REPRESENTATIVE ROTATIONS COMMON TO THE AREA

S. No.	Crop	Weight of Grain	Total Removal Grain & Straw		
			Nitrogen	Phosphorous	Potash
1.	Bajra	12 mds. 1000 lbs.	29	10	90
	Gram or	7.5 mds. 600 lbs.	(32)		
	Peas		5	10	24
			34	20	114
2.	Fallow		—	—	—
	Wheat	12 mds. 1000 lbs.	25	11	30
			25	11	30
3.	Jowar	10 mds. 800 lbs.	21	13	57
	Gram or	7.5 mds. 600 lbs.	(32)		
	Peas		5	10	24
			26	23	81
4.	Cotton	18 mds. 1500 lbs.	75	26	54
	Peas	7.5 mds. 600 lbs.	(32)		
			5	10	24
			80	36	78
5.	Cotton	18 mds. 1500 lbs.	75	26	54
	Wheat	12 mds. 1000 lbs.	25	11	30
			100	37	84
6.	Jowar	10 mds. 800 lbs.	21	13	57
	Wheat	12 mds. 1000 lbs.	25	11	30
			46	24	87
7.	Maize	22 mds. 1800 lbs.	71	29	68
	Gram or	7.5 mds. 600 lbs.	(32)		
	Peas		5	10	24
			76	39	92
8.	Green Manure Sannhemp	4000 lbs.	80	—	—
	Sugarcane 20 tons		48	32	158
			+32	32	158

FORMULA FOR FERTILIZER RECOMMENDATIONS
TYPICAL PRESCRIPTION FOR
100 BUSHEL MAIZE

Source of Nutrients	lbs. Nitrogen		lbs. Phosphate		lbs. Potash	
	Present	Crop Gets	Present	Crop Gets	Present	Crop Gets
Soil (By Test)	200	40%-80	80	40%-32	133	40%-53
5 tons Compost	50	30%-15	25	30%-7	50	50%-25
500 lbs. 20.5-0-0	102	60%-61				
400 lbs. 0-16-0			64	30%-19		
100 lbs. 0-0-60					60	60%-36
Total Crop May Get		156		58		114
Crop Needs		150		60		120

NUTRIENTS REMOVED BY DIFFERENT CROPS

S.No.	Crop	Basis		Nitrogen	Phosphate	Potash
1.	Wheat	Grain	1 md.	1.4 lbs.	0.8 lbs.	0.4 lbs.
		Straw	175 lbs.	0.8 lbs.	0.3 lbs.	2.2 lbs.
		Total		2.2 lbs.	1.1 lbs.	2.6 lbs.
2.	Barley	Grain	1 md.	1.5 lbs.	0.6 lbs.	0.4 lbs.
		Straw	140 lbs.	1.0 lbs.	0.4 lbs.	2.0 lbs.
		Total		2.5 lbs.	1.0 lbs.	2.4 lbs.
3.	Lucern	Dry weight	2000 lbs.	50.0 lbs.	11.0 lbs.	32.0 lbs.
4.	Maize	Grain	1 md.	1.4 lbs.	0.8 lbs.	0.5 lbs.
		Straw	165 lbs.	1.8 lbs.	0.6 lbs.	2.7 lbs.
		Total		3.2 lbs.	1.4 lbs.	3.2 lbs.
5.	Cotton	Cotton	1 md.	2.7 lbs.	1.0 lbs.	1.0 lbs.
		Sticks	200 lbs.	2.3 lbs.	0.7 lbs.	2.5 lbs.
		Total		5.0 lbs.	1.7 lbs.	3.5 lbs.
6.	Paddy	Paddy	1 md.	1.0 lbs.	0.6 lbs.	0.3 lbs.
		Straw	163 lbs.	1.0 lbs.	0.3 lbs.	3.0 lbs.
		Total		2.0 lbs.	0.9 lbs.	3.3 lbs.
7.	Groundnut	Nuts	1 md.	2.5 lbs.	0.4 lbs.	0.4 lbs.
		Straw	250 lbs.	1.1 lbs.	0.2 lbs.	1.7 lbs.
		Total		3.6 lbs.	0.6 lbs.	2.1 lbs.
8.	Bajra	Grain	1 md.	1.2 lbs.	0.5 lbs.	0.8 lbs.
		Straw	250 lbs.	1.1 lbs.	0.3 lbs.	6.6 lbs.
		Total		2.3 lbs.	0.8 lbs.	7.4 lbs.
9.	Jowar	Grain	1 md.	1.1 lbs.	0.7 lbs.	0.6 lbs.
		Straw	250 lbs.	1.0 lbs.	0.6 lbs.	5.3 lbs.
		Total		2.1 lbs.	1.3 lbs.	5.9 lbs.
10.	Soyabean	Grain	1 md.	6.0 lbs,	2.0 lbs.	2.2 lbs.
		Straw	170 lbs.	1.0 lbs.	0.5 lbs.	1.3 lbs.
		Total		7.0 lbs.	2.5 lbs.	3.5 lbs.
11.	Sugarcane	Harvest wt.	2000 lbs.	2.6 lbs.	1.6 lbs.	7.9 lbs.
12.	Gram		1 md.	4.2 lbs.	1.3 lbs.	3.2 lbs.

RESULTS FROM 37 COMPLEX FERTILIZER TRIALS IN 13 STATES ON MAIZE BY ICAR REPORTED 1962

Veriety	Average yield of 37 trials		Difference in mds./ acre	Rupee gain	Cost of 60 lb. N (Rs.)	Net Rupee return over cost of 60 N
	Low, 40 lb. N	High, 100 N				
Ganga 1	28.3	34.9	6.6	79.20	48.00	31.20
Ganga 101	35.7	44.0	8.3	99.60	48.00	51.60
Ranjit	31.9	39.5	7.6	91.20	48.00	43.20
Deccan	33.7	41.9	8.2	98.40	48,00	50.40
Local	25.6	28.7	3.1	37.20	48.00	—10.80

All plots received 80 lbs. P_2O_5 and 40 lbs. K_2O and standard quantity of farm yard manure.

One of the hybrids on the high fertility plots yielded 75 mds. per acre. The basic cost of 100-80-40 was Rs. 143. The maize at Rs. 12/md. was worth Rs. 900 thus a return above cost of Rs. 757/acre.

GOOD SEED OF IMPROVED VARIETIES NEEDED EVERY YEAR

Improved varieties are made available through seed multiplication schemes.

1. Seed farms, seed marketing societies and seed dealers *can* assure that this seed is high in germination and free of trash and weed seed through proper grading and seed testing. Seed testing laboratories can help you.

BUT...

Cultivators may use own seed, except for hybrid maize, 4-5 years.

1. Good germinating, pure seed of improved varieties is needed *every* year for full stands to secure maximum yields.
2. Cultivators can and should test their own seed for germination.

Important points about seed germination :

1. Dry seed (less than 12% moisture) should have been stored in a cool, dry place.
2. Seed germination cannot be determined by looking at the seed—test 100 seeds selected at random for germination.
3. Seeds can be germinated in sand, soil, cotton, absorbent paper, and cloth—use any method but test it.

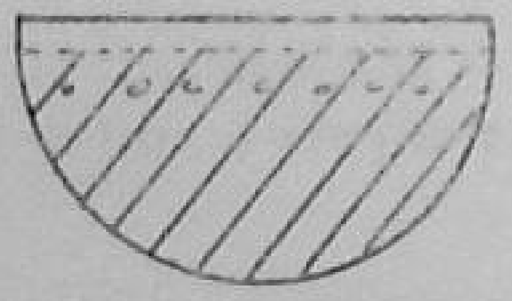

Pot with sand or soil

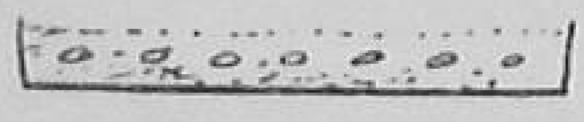

Pan with cotton or absorbent paper

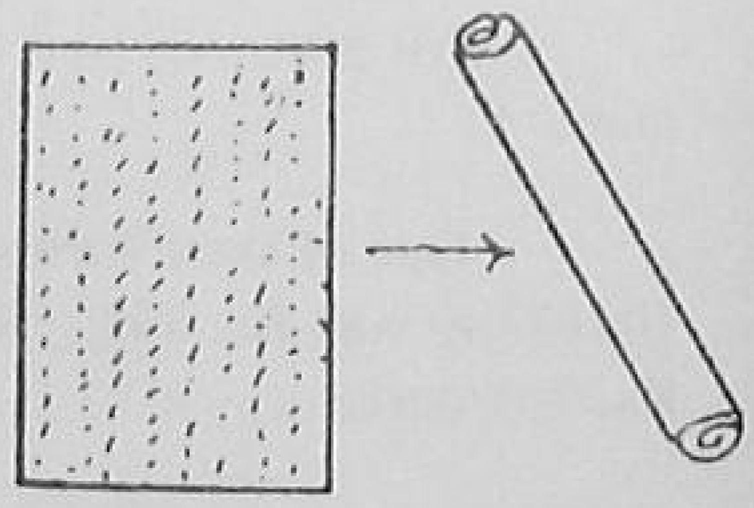

Rolled towel with cloth or absorbent paper

4. Most seeds germinate best with temperature between 20° C and 30° C (68°F-86°F).
5. Seeds should be kept moist but not *wet* during germination.
6. Some seeds require longer than others to develop normal seedlings—be patient—7-14 days is needed for most seeds.
7. Let seeding develop a healthy plumule (leaf area) and root before counting it as a "good seedling".
8. If germination is low (below 75-80%), recommend getting new seed or adjusting seeding rate.

CROPPING SYSTEM

Requirements of a good cropping system

1. It should include as large an amount as possible of those crops having good income producing ability without depleting the soil below an economic production level.

2. It should permit the whole farm organization to make the best use of all the available production resources.

3. It should not lower the productivity of the soil resource if its income producing ability is to continue.

4. It should fit the land resource and be within the farmer's ability and resources to carry it out.

5. It should include as nearly as possible the same maunds and tons of production each year, if a uniform programme of operation is to be carried out.

6. It should make maximum use of the water and plant foods available for crop production and reduce soil nutrients and water losses to a minimum.

7. It should give maximum assistance in the control of weeds, insects and diseases.

Crop Rotations Should :

1. Be made up of crops adapted to the soil and its condition and climate.
2. Be made up of crops which fit together in a logical sequence.
3. Contain a combination of crops and management practices in proper proportion to furnish nutrients and maintain soil structure.
4. Include a minimum of crops subject to failure.
5. Provide balanced production of each of the crops grown.
6. Furnish adequate roughage and pasture or fodder.
7. Include as large area of the land as possible in crops with greatest income producing ability without depleting the soil.
8. Meet the needs of the farm and the cultivator within the limits of the farm operation.
9. Be flexible enough to adjust to poor stands, late seasons, storm damage and other causes without losing the benefits of a planned continued programme of production.

ORGANIC MATTER

Organic matter is defined as any matter that ever contained life. The active constituent of organic matter is the humus which is a dark jelly like substance and the final product of all bacterial activity. It is the main substance which holds nitrogen for use by the plants. Presence of organic matter improves soil texture, structure, tilth and workability, fertility drainage and permeability. *Carbon : Nitrogen* ratio of various sources of organic matter.

Name of the substance	*C :N Ratio*	*Name of the substance*	*C: N Ratio*
Humus	10-12:1	Dry maize stalks	63:1
Lucern-Bersum	23:1	Wheat green	36:1
F.Y.M.	20-25:1	Wheat straw (Busa)	80:1
Vetch (Guara)	28-30:1	Dry grass	80:1
Green rye	36:1	Saw dust	400:1

It may be noted that when any of the materials is either composed or green manured, the excess of carbon above 10-12 parts combines with oxygen or water to form carbon dioxide carbonic acid.

1. ORGANIC MATTER
   Store house for plant nutrients
2. SUPPLY NUTRIENTS FOR PLANT USE

	N	P	K	Dry weight basis
F.Y.M.	.3%	.1%	.3%	
Compost	.5%	.3%	.5%	

3. INCREASES WATER HOLDING CAPACITY
   Water holding capacity—13% by weight—may be most important function in some soils.
4. IMPROVES STRUCTURE AND WORKABILITY
   In light soils it holds particles together (binding)—in medium and heavy soils, it holds particles apart
5. IMPROVES AIR RELATIONSHIP AND PREVENTS SEALING ON SURFACE
   Makes it easy for water to enter the soil and air to escape.
6. PREVENTS DAMAGE FROM SPLASH EROSION
   Breaks the force of the rain drops where some is left as much on the surface.
7. LOWERS SOIL TEMPERATURE AS MUCH
   Temperature may be lowered as much as 25° F i.e. soil temperature 99°F as fallow at one inch depth. Soil temperature would be 74°F under mulch.
8. INCREASES BACTERIAL ACTIVITY
   Release of nutrients from organic and mineral materials.
9. REDUCES EVAPORATION OF MOISTURE
   By increased water holding capacity and cooler temperature under mulch.
10. HELPS TO CONTROL EROSION
    Better infiltration of water and binding of soil particles together into longer aggregates.
11. HOLDS NITROGEN FOR PLANT USE
    Keeps nitrogen from leaching as badly as holds it in reach of plant roots. Ninety five per cent of soil nitrogen may be involved with organic matter.

LAND FORMING

Land forming is giving the correct slope to a piece of land so that water will move across it in an accepted, pre-determined manner. We can use the process to aid drainage as well as irrigation for it gives us the basic tool to manage the flow of water over a field.

Some basic rules to remember in forming the land surface are :—

1. Heavier soils have slower penetration of water, therefore, irrigation slopes must be flatter to allow the water to go into the soil.
2. Conversely, light, sandy soil allows rapid penetratian so slopes must be steeper to allow irrigation water to move across the surface as well as into the soil.
3. Slope is generally imparted to but one direction of the field while the land is level across the opposite direction.
4. Length of run for irrigation water can be longer on heavy soils than on light. Sandy soils should not have lengths of run over 300 feet, while heavier soils may have water running up to 1000 feet across the field.
5. Irrigation water and drainage water should move across the land in a non-erosive manner.

Following are the steps involved in land forming :

1. Plowing the land and getting it into a friable condition so that the soil can be moved.
2. Have grid stakes set and marked by competent technical personnel.
3. Using bullocks and buck scraper begin moving soil from the deepest cuts to the fill area.
4. Check progress of cuts with a hand level.
5. Place about 10% more dirt on the fill stakes than called for to allow for setting.
6. Use land plane cross-wise to plane or smooth down the rough spots caused by the buck scraper.
7. Check again the levels of the field with surveying instrument. Make any further adjustment with the buck scraper.
8. Pull the land plane lengthwise to give final smoothing to the field. Except for occasional checking on levels by observing water, this last operation, following plowing, is usually a sufficient land preparation measure each year.

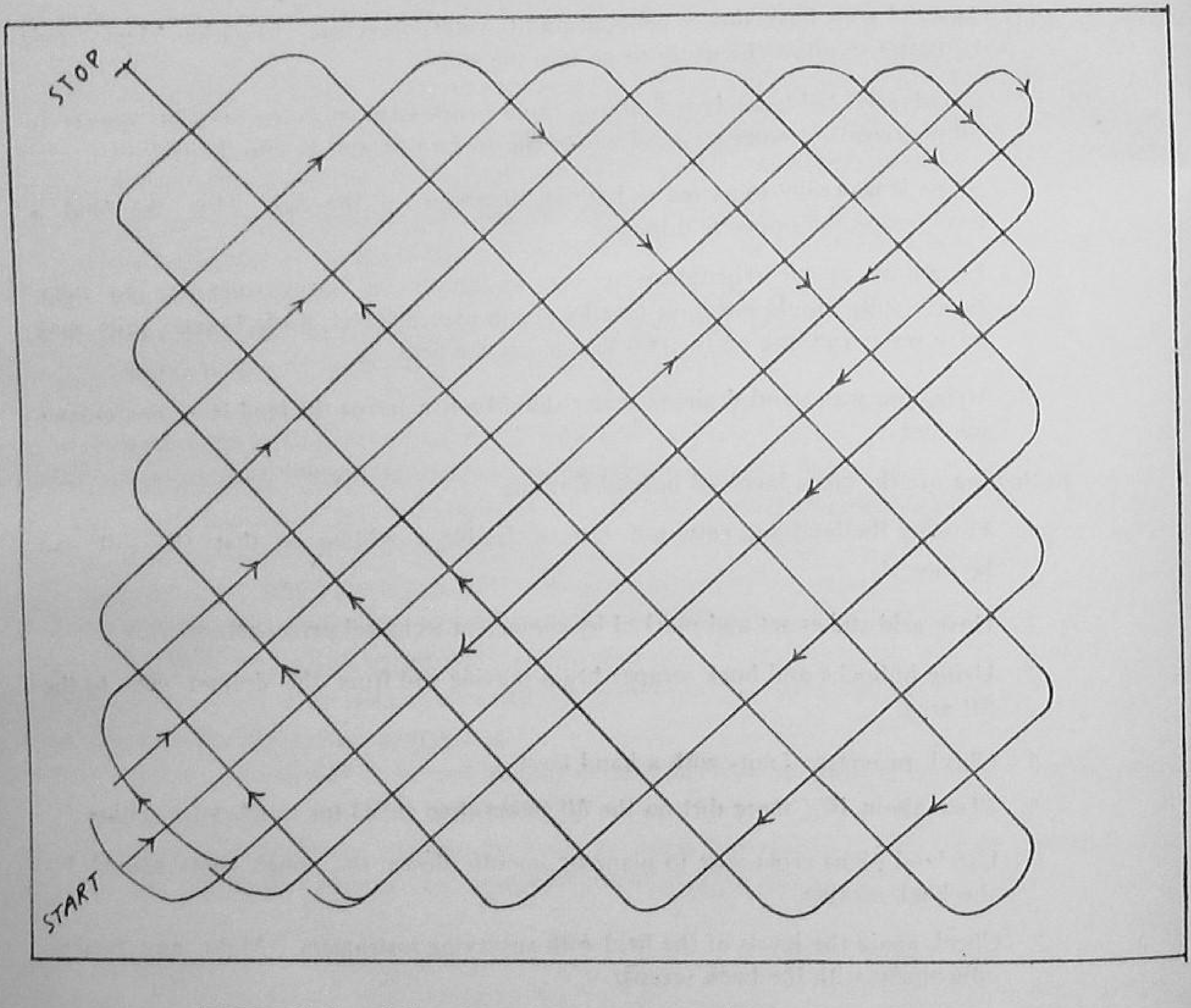

METHOD OF LAND SMOOTHING
OPERATION WITH LAND PLANE

FURROW IRRIGATION

After the land has been planned and properly sloped the furrows can be placed in the field. A furrow is a channel across a field normally used to irrigate between two rows of crops. The slope of the furrow is determined by the slope of the land. This in turn has been determined by the soil type, the amount of water available, the crop, and the implements available. It is always advisable to get competent technical help to layout the first furrow irrigation system on a piece of land.

The following are the steps taken to prepare the land for furrow irrigation :

1. Plow, disc and plane the field. This operation should be an annual or recurring practice on the field.
2. There are three accepted methods of adopting furrow irrigation to the cropping pattern.
   (a) Plow in the furrow leaving the ridges at the correct line spacing for the crop planted and plant the crop on the ridges. Irrigation can follow immediately. Or—
   (b) Plow in the furrows leaving the furrows at the correct line spacing for the crop planted and plant the crop in the furrows, irrigating after the crop is up, and when crop is high enough, plow the ridge into the furrows and continue irrigation between the lines.
   (c) Plant the crops on the flat surface in lines and develop the furrows by cultivating with the furrow plow. The furrows are used for irrigation after the first cultivation and as more water is needed the furrow capacity is increased. It is necessary that the soil be high in moisture before the planting when using this method.
3. Make sure that water does not move down the furrows in such quantity as to cause erosion, or with such speed as to be erosive. If the land is properly shaped and quantity of water delivered to each furrow is controlled this will be no problem.
4. Drainage must be provided at the end of the furrows on the low side of the field.
5. Water can be siphoned directly from the distribution ditch, or a header ditch, must be constructed along the high side of the field. Hose pipe syphons are the easiest method employed to put water into the furrows, however, other methods may be devised (see job sheet on turnouts).

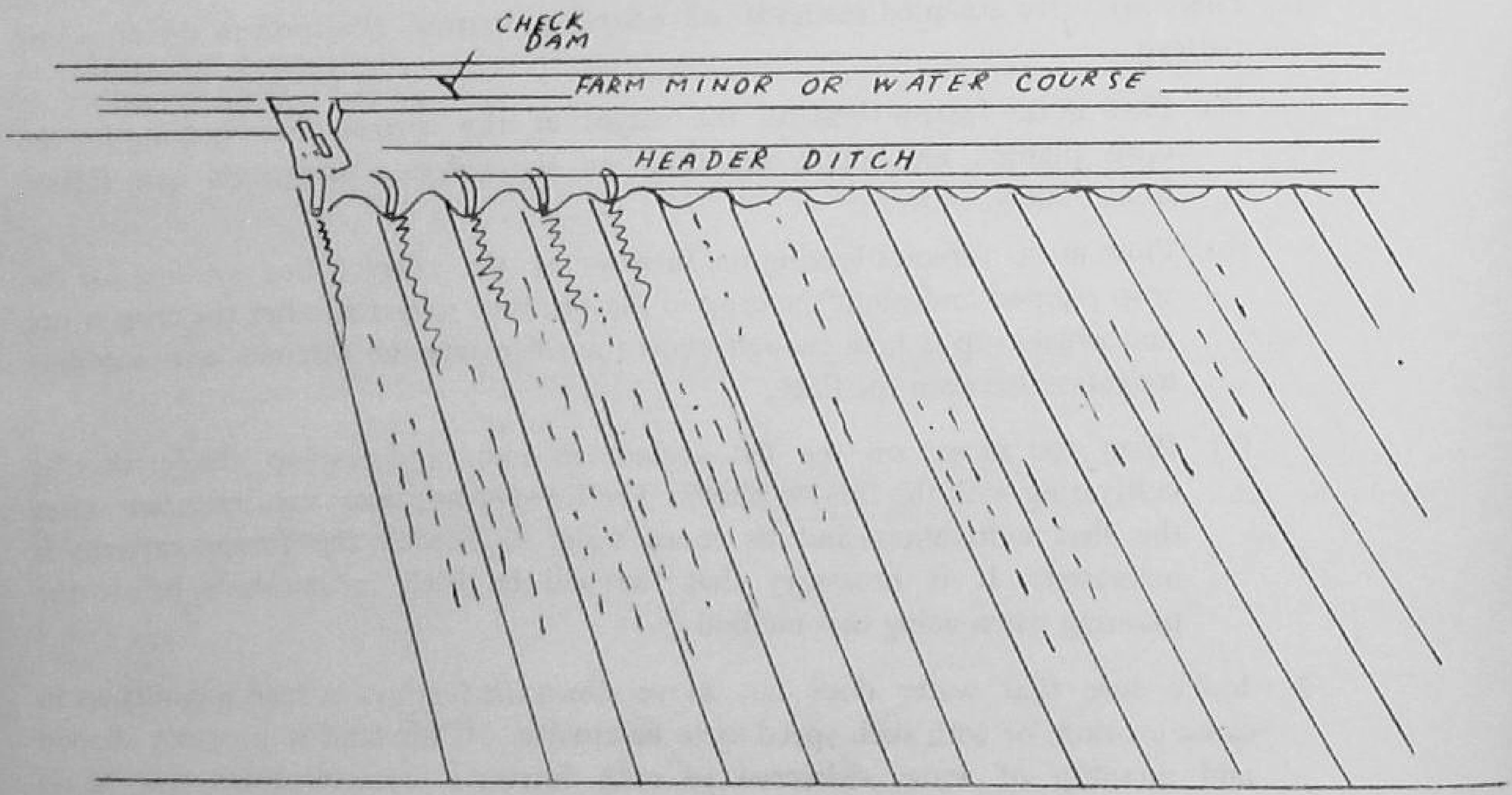

FURROW IRRIGATION

JOB SHEET ON GRADED BORDER STRIP LAYOUT

A border strip is a plot of land 15 to 33 feet wide, lying between two small bunds or ridges down which a sheet of water will pass. It should be designed by a competent technician who will be able to determine the width of the strips, the length, the slope and the amount of water to put on the strip. All of these must be determined prior to shaping and forming the land for irrigation.

After the land has been smoothed and planned the following steps are to be followed in preparing the border strips :

1. Determine the width of the strips and put in the border ridges or bunds. These should be done with the border ridger and will leave a bund about 10" to 12" high and two feet wide at the base.
2. Use land plane and make two or three rounds over the land between the ridges placing some soil in the furrows formed by the border ridger.
3. Place irrigation header ditch and the tail water drainage ditches across the ends of the fields.

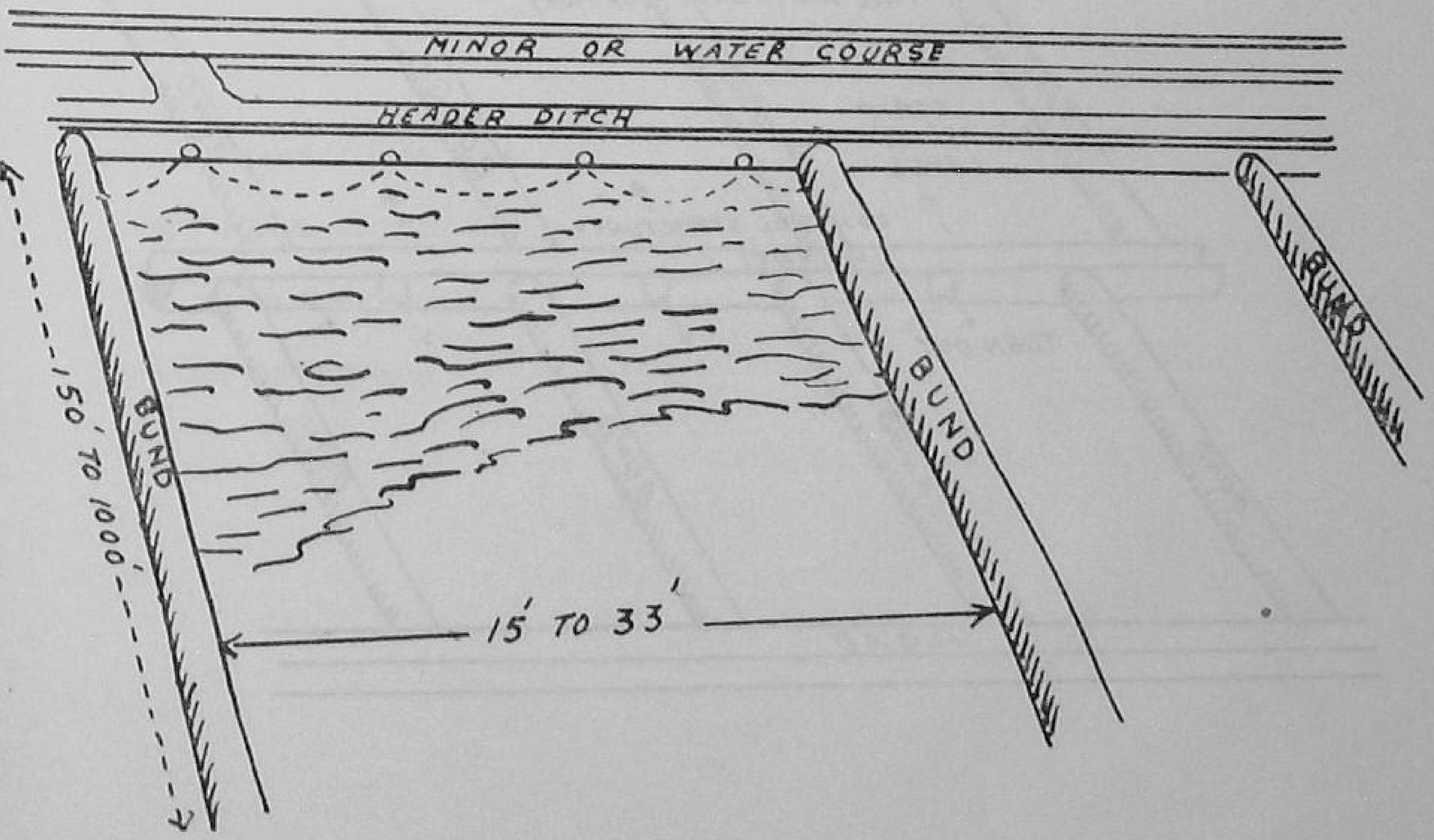

JOB SHEET ON CONTOUR BORDER STRIP LAY-OUT

(Opening par same as for graded borders)

1. Make topographic map of field.

2. From infiltration data, water holding capacity of soil, quantity of water and crops to be grown, determining width of strips. Build bunds with plow and border ridger or bund former to a weight of ten to twelve inches and two feet base width.

3. Use land plane and make two or three rounds over the land between the bunds placing some soil in the furrows formed by the bund former.

4. Locate irrigation supply channels to deliver water in two directions from channel. Construct channel with bottom at or near ground surface and banks of sufficient weight for water to be delivered.

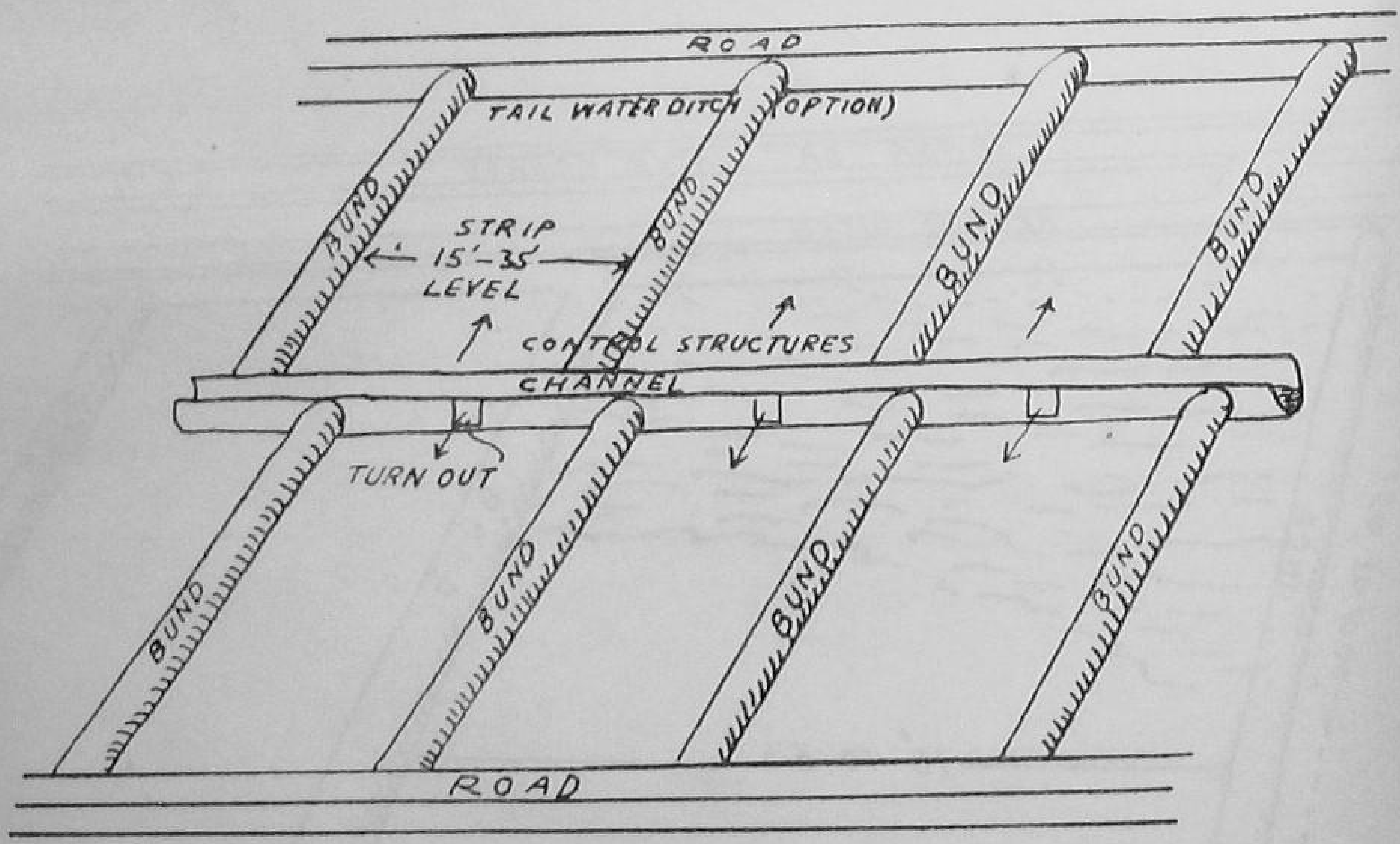

OPTIMUM TIME OF WATERING

Contour Border Strip

Formula for Optimum time for Watering, T

$$T = \frac{15\,(D)}{I}$$

D= Depth of water (in inches) to replace water in soil profile

I = Infiltration rate (in inches per hour) of soil to be irrigated.
Determined by Infilterometer Rings

Conversion table for water

450 gallons per minute=

1 cubic foot per second=

1 acre inch per hour

DITCH CONSTRUCTION

Ditches are usually thought of as open conduits for conveying water. They are generally of earth construction, being both lined and unlined. Since most distributaries and minors are constructed by the irrigation departments we will concern ourselves only with the water courses that deliver water to a field and to the header ditches that are used to distribute the water on the field.

Ditches are generally constructed by hand. They must be constructed so that water can be turned out of them into a field. The following design is ideal for field irrigation. It can be enlarged or decreased proportionately for larger or smaller flows of water :

Ditches can be best constructed using the following steps :

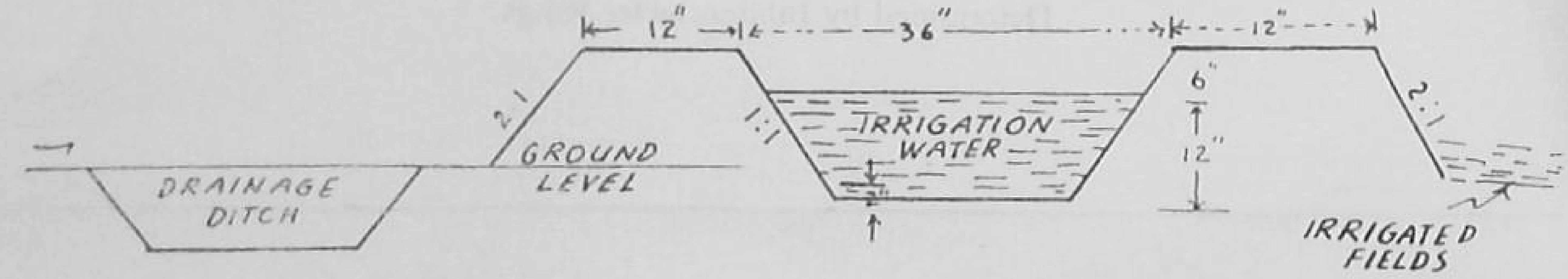

1. Secure competent technical assistance for laying out the ditch lines. A survey is necessary to do this properly.

2. Determine the quantity of water that will be available and have the engineer or field man determine the ditch size. The one shown in the diagram will carry up to 2 cusecs with a relatively flat slope.

3. For more permanent ditches the hand method is satisfactory. They can be dug and shaped with a shovel. Care must be taken to borrow dirt from the up hill side of the ditch so that the excavated area may serve as a drainage ditch for the higher field.

4. Temporary ditches can be built with a V-ditcher or with a mould board plough. Care must be taken to borrow dirt from the outside of the irrigation ditch so that the ditch bottom is not below the level of the field to be irrigated. It may be necessary at times to borrow some soil from the canal to maintain grade, but the water level in the ditch should be 6 to 8 inches above the ground level.

5. Where ditches are parmanent or where they pass through sandy soil they should be lined with a non-porous material. Some recommended linings are concrete, brick, asphalt, plastic film or bentonite.

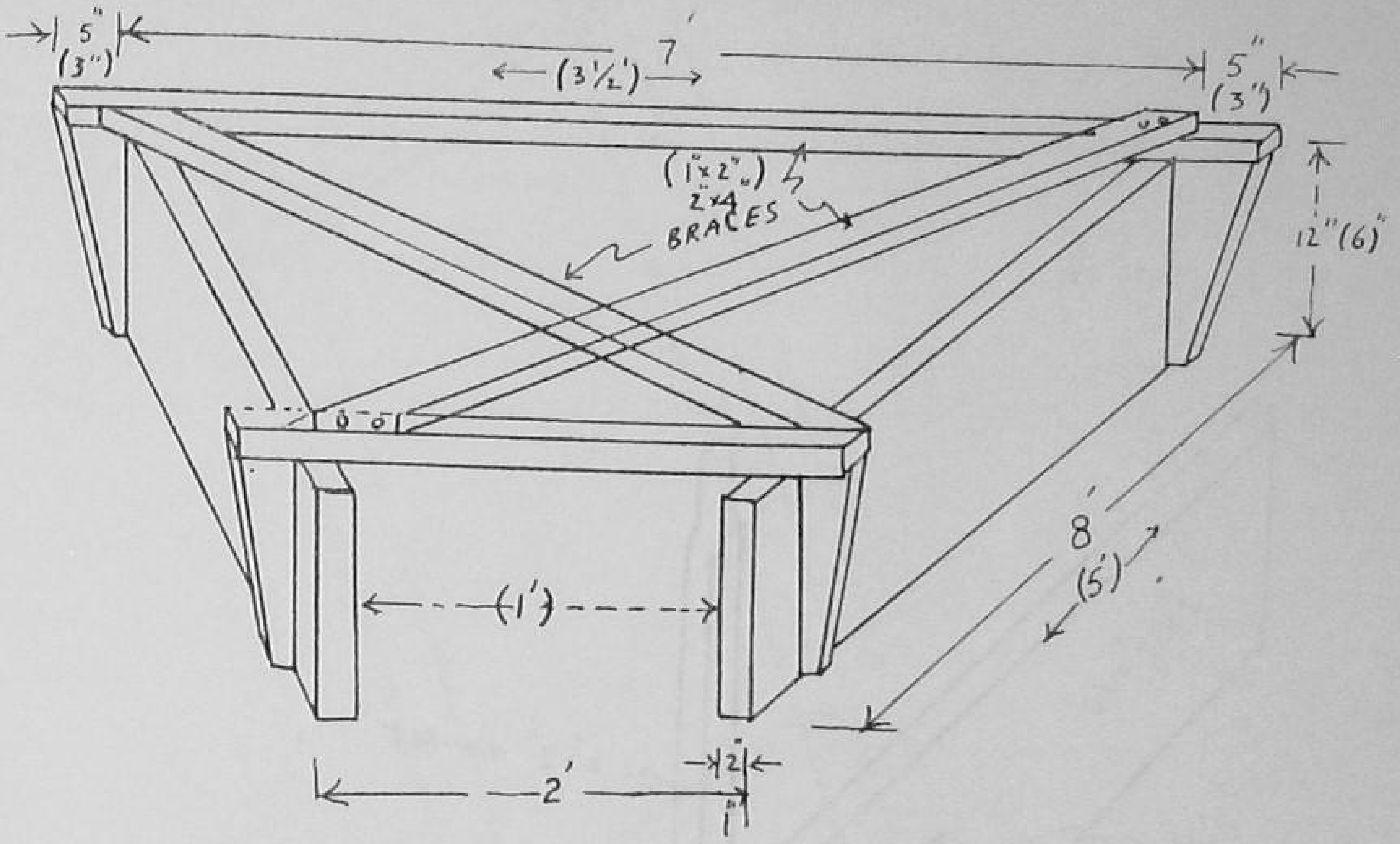

BORDER RIDGER

FIGURES IN BRACKETS FOR ANIMAL DRAWN
OTHERS FOR TRACTOR DRAWN

IN THE FIGURE AT THE RIGHT, THE FLAG HAS TWO NUMBERS. THE TOP NUMBER INDICATES THE CUT, IF MINUS, AND THE FILL, IF PLUS. THE LOWER NUMBER INDICATES THE FINAL HEIGHT OF THE TOP OF THE FLAG ABOVE THE AVERAGE SURROUNDING GROUND SURFACE WHEN SHAPING IS COMPLETE.

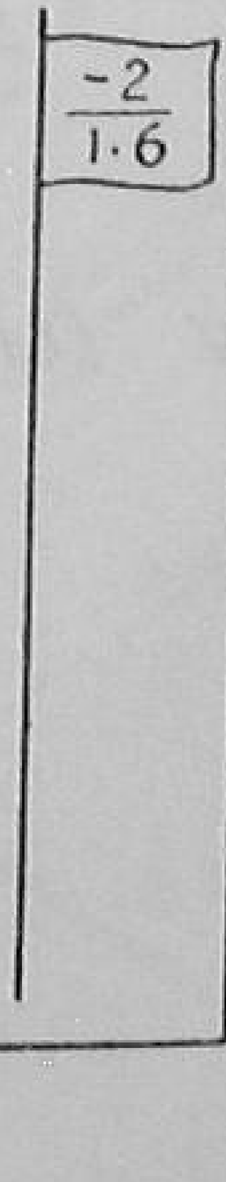

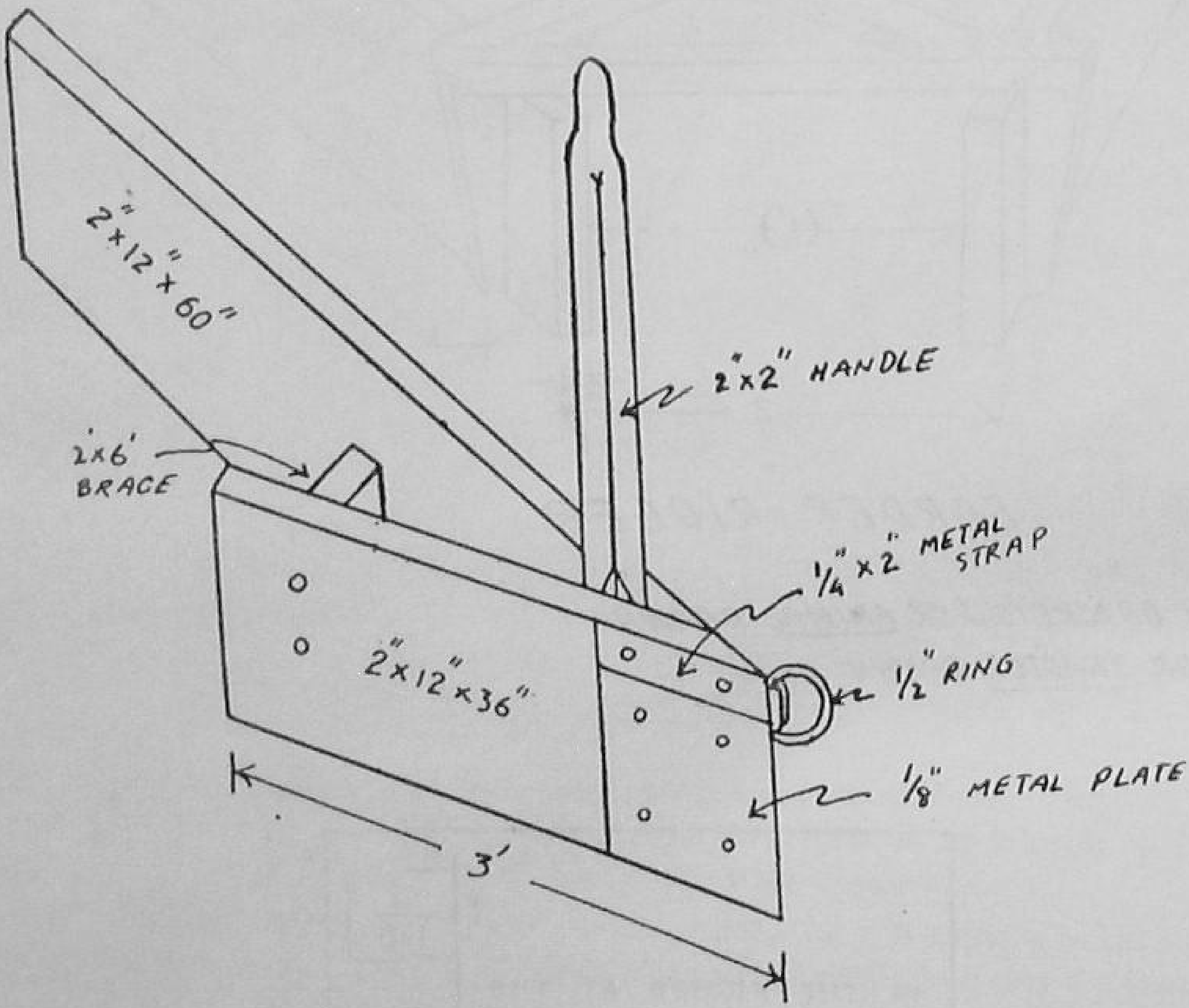
2" x 12" x 60"
2x6' BRACE
2"x2" HANDLE
1/4" x 2" METAL STRAP
1/2" RING
2" x 12" x 36"
1/8" METAL PLATE
3'

V. DITCHER

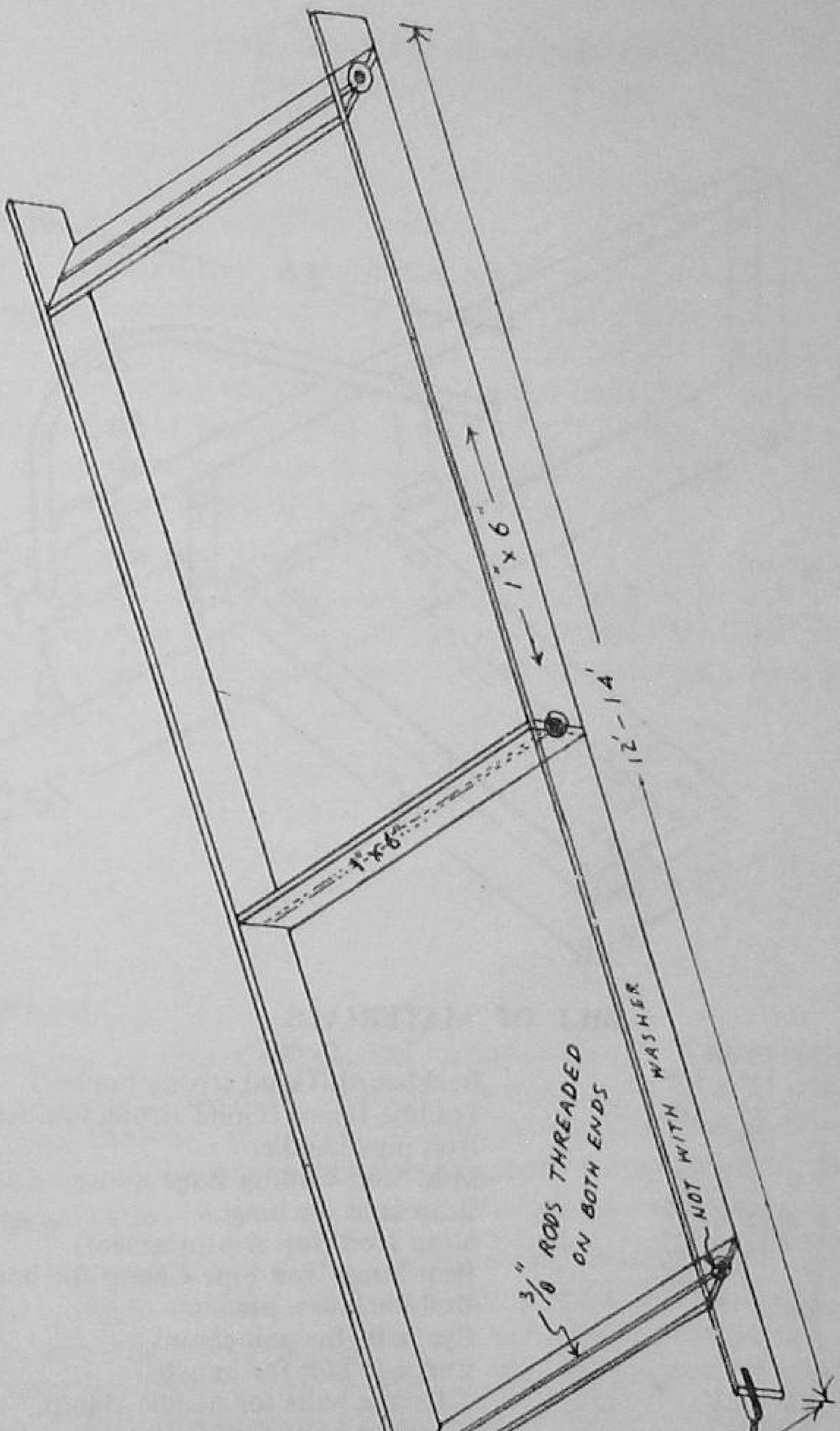
1" x 6"
12'-14'
1"x6"
3/8" RODS THREADED ON BOTH ENDS
NUT WITH WASHER
3 1/2'
ROPE OR CHAIN

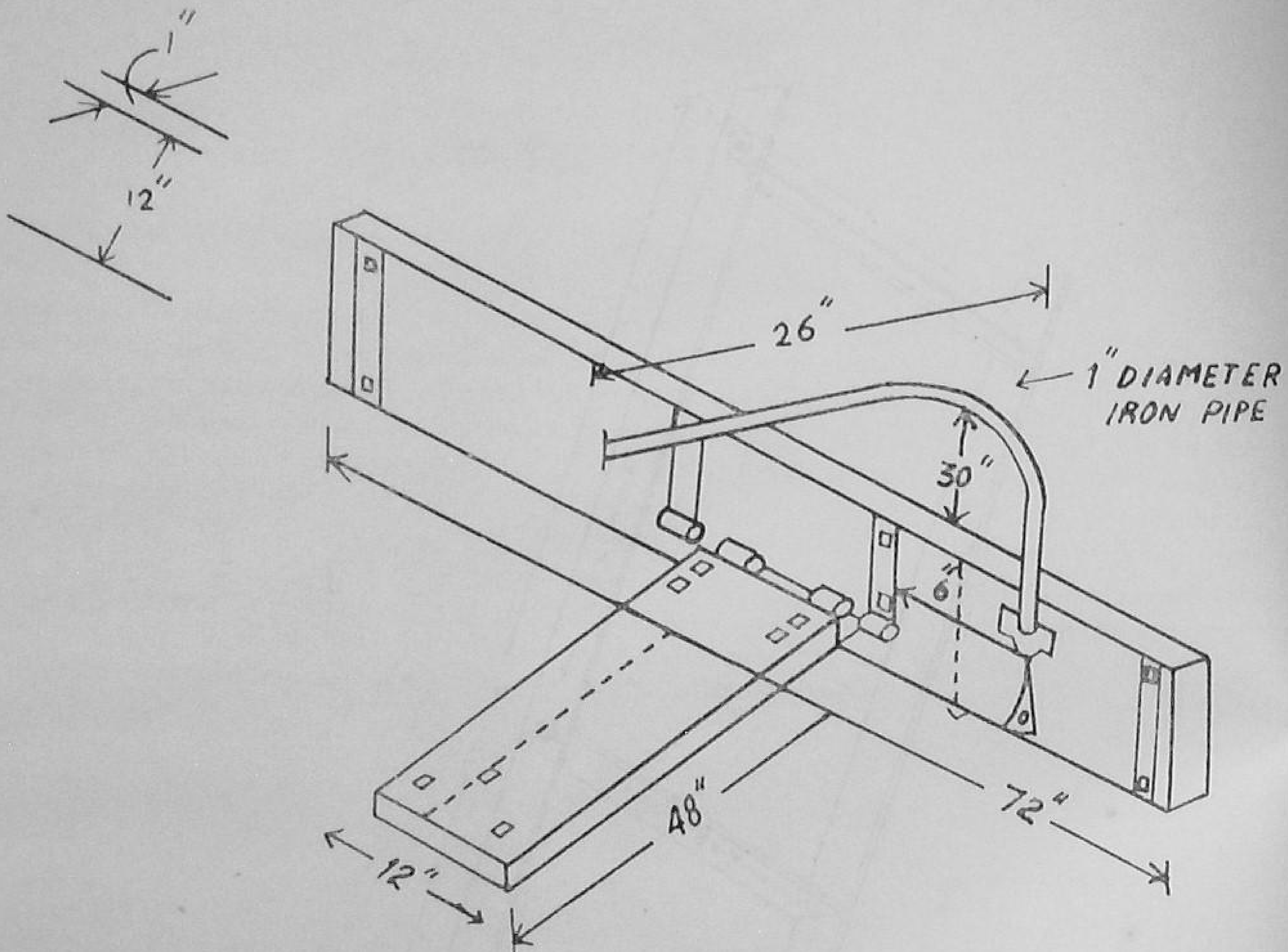

BILL OF MATERIALS

Quantity	*Dimension*	*Items*
1	1″ × 12″ × 72″	Buckboard (Good strong lumber)
1	1″ × 8″ × 36″	Trailing Board (Good strong lumber)
1	1″ × 48″	Iron pipe handle.
1	¼″ × 2″ × 72″	Mild Steel Cutting Edge.
4	¼″ × 1½″ × 14″	Strap Iron for hinges.
2	¼″ × 1½″ × 12″	Strap Iron (for reinforcement)
1	¼″ > 1½″ × 8″	Bent Strap Iron Pipe Clamp for handle.
1	5/8″ × 16″	Rod for hinge pin.
2	5/8″ × 2½″	Eye bolts for pull chains.
1	½″ × 3″	Carriage bolt for handle.
2	3/8″ × 2½″	Carriage bolts for handle clamp.
24	½″ × 2½″	Carriage bolts for blade, straps etc.
4	½″ × 6″	Carriage bolts for ends.
2	3″ × 4″ × 12″	Wooden blocks for ends.
1	¼″ × 5″ × 8″	Steel plate for tail board skid.

Possibly the most useful implement in levelling land for proper irrigation is the scraper. By using the scraper it is easier to move the right amount of loosend soil from the higher spots to the low areas of the field and spread it at the desired thickness. In levelling land in contoured border strips it is best to scrape directly across at right angles to the strips. Side fall should be removed by scrapping the upper portion of each strip and filling the lower portion as the scraper is worked down the hill. On the return trip uphill, the ridges are formed from earth cut below each ridge.

This scraper is a simple one which may be made by any carpenter or blacksmith. Two bullocks may easily draw it. In addition to scraping, it may also be used in forming border ridges or bunds.

SOIL AND LAND MANAGEMENT

M. HARRISON TAYLOR

Introductory

Soils as we see today are the outcome of various weathering agencies working on different types of rocks through millions of years.

According to the generally accepted theory, originally it was all a huge mass of very hot gases which gradually cooled down to a hot fluid and then a crust type of thing was formed on the top of this fluid which came to be known as earth's surface. Things cooled down gradually due to the action of water and air till such time that conditions became favorable for life. To have a rough idea of the existence of life on earth's surface, imagine a pillar 750 feet high compared with a line of the thickness of an ordinary pencil drawn line. Man's existence on the earth is still less say 1/10th of the thickness of an ordinary line.

Definition of Soil

A simple definition is that soil is the mineral plus organic portion of the earth's surface capable of supporting plant life. Soil composition is so variable that it will not be an exaggeration to say that soil varies from inch to inch. However an average ideal soil has the following composition by volume :

Mineral Matter	48%
Organic matter	2.0%
Air	20%
Water	30%
	100%

Weathering Agencies

Factors which are responsible for soil formation through their action on various rocks are known as weathering agencies. They are water, wind, glaciers, temperature, pressure, gravity, plants and bacteria, etc. These various weathering agencies have different modes of action but variable itensity i.e. transportation and graded sedimentation of the soil material and the resulting soils are called alluvial and loess or aolian soils, respectively.

Action of temperature and pressure is expansion, contraction and eventual breaking up of rocks thus giving rise to residual soils which are formed *insitu*. Glaciers and gravity also transport and sediment the soil material giving rise to till and colluvial soils. Plants grow and their roots penetrate into the soil, their action is more of physical nature and to some extent chemical. Bacteria have more or less a chemical and biological type of action as a weathering agency. Different rocks which go to form soil due to action of weathering agencies are called parent material. Chemical weathering is brought about by mainly simple solution, oxidation and hydration etc.

Soil Profile

A vertical section of the soil is called a profile. When we look at a profile it looks like different layers of material placed on one another. These layers are called horizons of which upper 9"—12" is called top soil and below subsoil down below upto parent material. The horizons are also termed A, B and C.

Identification of Soil horizons :

Physical characteristics of different horizons are tabulated below on a comparative basis :

	Topsoil	*Subsoil*	*Parent material*
Colour	Dark	Lighter	Lighter
Texture	Lighter than B in 90% soils	Heavy	Variable, often higher than B
Structure	Small aggregates	Larger	Variable (often larger) not always definite

Physical characteristics of soils :

Some of the physical characteristics of transported soils are as under :

S. No.	*Name of the soil*	*Agent*	*Characteristics of the soil materials*	*Profile Development*	*Position*
1.	Alluvial	Water	Stratified, water worn rounded rocks and gravel (Bet are a typical alluvial)	No	Bottom (Bet)
2.	Terrace (Dhaya)	Water	Same as for 1.	Yes	Terrace (Dhaya)
3.	Loess or aolian	Wind	Smooth silty matter	Yes	Upland
4.	Glacial	ice	Graded, highly sharp material	Yes	-do-
5.	Colluvial	Gravity	Sharp and angular material	Yes	Talus
6.	Lacustrine	Water	-Do- (formed at the base of a lake)	Yes	Terrace

Soil Texture :

Soil texture indicates the percentage of clay, silt and sand present in the soil. The particle size of these three constituents varies considerably and so does their percentage in a soil type also called textural class.

Sizes of different soil particles are as under :

Soil Particle	*Size in Millimeters*
Fine Gravel	1-2
Coarse sand	1-0.5
Medium sand	0.5-0.25
Fine sand	0.25-0.10
Very fine sand	0.10-0.05
Silt	0.05-0.005
Clay	Below 0.005

If a soil suspension in water is allowed to settle, sand of all sizes will settle down in 1 minute, silt particles in 2 hours while clay will settle down in 48 hours. Soil Scientists have classified soil into 12 textural classes but in general we can classify soils in three main textural groups i.e. light, medium, and heavy soils. With the help of percentages of sand, silt and clay found by simple sedimentation, the textural classes can be ascertained from the following key :

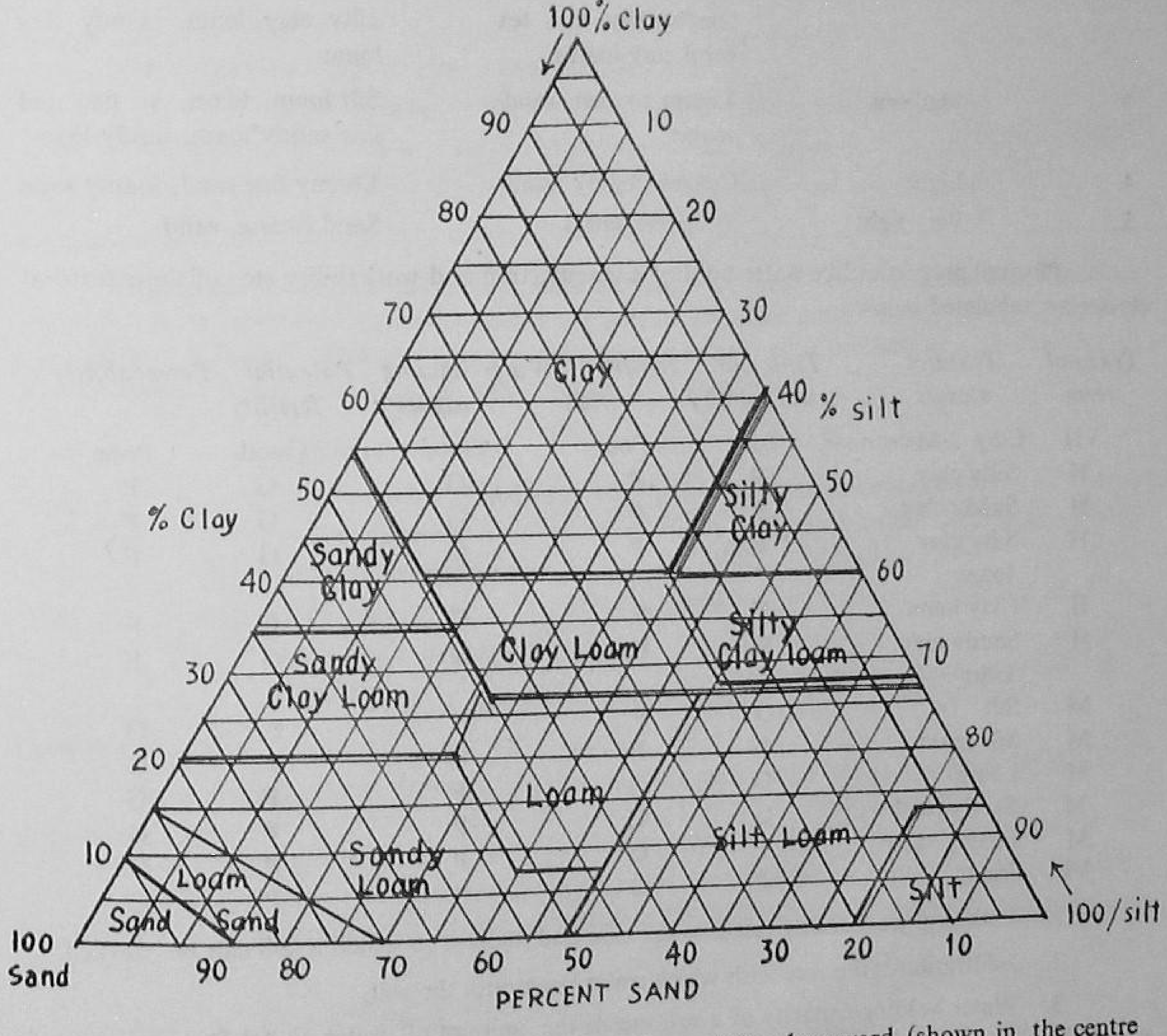

1. Silt can be determined by following the diagonal line downward (shown in the centre by a downward arrow).

2. Sand can be determined by following the diagonal upward (shown by upward arrow).

3. Clay content is found by following the line running horizontally from left to right.

Various textural groups falling under heads light, medium, and heavy are :

S. No.	*Suggested textural term*	*Alternate terms*	*Suggested textural class to be included*
1.	Very heavy	V. fine textural heavy clays	Heavy clay, 60% or more 2-micron clay
2.	Heavy	Fine textural clays to moderately fine textural clay loams	Clay, silty clay, sandy clay, silty clay loam, sandy clay loam
3.	Medium	Loams to fine sandy loams	Silt loam, loam, v. fine and fine sandy loam, sandy loam
4.	Light	Coarse loamy sands	Loamy fine sand, loamy sand
5.	Very light	V. coarse sands	Sand course, sand

Physical properties like water holding capacity, tilth and workability etc. of these textural classes are tabulated below :

Textural term	*Textural classes*	*Tilth and workability*	*Infiltration*	*Water holding capacity*	*Potential fertility*	*Permeability*
VH	Clay 2-Micron	Poor	Poor	Good	Good	Poor
H	Silty clay	P	P	G	G	P
H	Sandy clay	P	P	G	G	P
H	Silty clay loam	Fair	P	G	G	F
H	Clay loam	F	F	G	G	F
H	Sandy clay loam	F	F	G	G	F
M	Silt	G	F	G	F	G
M	Silt loam	G	F	G	F	G
M	Loam	G	G	F	F	G
M	Sandy loam	G	G	P	P	G
M	Loamy sand	F	G	P	P	G
VL	Sand	P	G	P	P	G

1. Tilth and workability relate to the ease and fineness to which a soil can be worked.
2. Infiltration is the rate with which water penetrates the soil.
3. Water holding capacity of a soil means the amount of water that 1 foot column of soil will hold and which is available to the plants.
4. Potential-fertility is basically dependent upon heaviness or lightness of the soil.
5. Permeability is the rate of flow of water inside the soil.

Soil texture is also influenced by the presence of organic matter which improves it considerably.

Other physical properties of soil are soil structure and soil colour.

Soil Structure :

It is the arrangement of soil particles. It may be:

1. *Platy :* Soil with such a structure will have poor permeability and hence poor drainage.
2. *Blocky :* Such a structure may account for excessive drainage.
3. *Prismatic or Columnar:* Such a structure will have easy permeability and thus good drainage.
4. *Nut like :* This will have excessive drainage.
5. *Single grain structure :* Such a structure will have excessive drainage.
6. *Crumb or Granular :* Such a structure is ideal—proper drainage and permeability.
7. *Massive :* Will not allow good tilth, poor drainage and low permeability.

Soil Colour :

Soil colour determines the extent of drainage and to some extent organic matter content of a soil. A defective drainage will produce a combination of different colours like grey, brown and yellow. It is also called mottling while a good drainage will produce a uniform reddish brown colour. A key to soil colour and drainage is as under :

S. No.	*Type of Drainage*	*Soil Colour*
1.	Very poorly drained	Grey colour on the surface
2.	Poorly drained	Grey and yellow colour at a depth of 0-6″
3.	Moderately well drained	—do— 6-18″
4.	Well drained	No mottling, uniform reddish brown colour
5.	Excessively drained	Bright reddish colour
6.	Droughty	Pure sand or gravel, water goes too fast

Land Features :

Effective depth, slope, drainage, erosion and surface texture are main land features.

Effective Depth :

This is the depth of soil layer upto which plant roots can go without being obstructed. This depth may be limited by a hard pan, concretion, salt concretion or water. A classification of depth can be :

	Class	*Depth*
1.	V. Deep	60″ and above
2.	Deep	36″—60″
3.	Medium	20″—36″
4.	Shallow	10″—20″
5.	Very Shallow	Below 10″

Erosion Classification

Extent	*Class*
0-25% top soil eroded away	1.
25-75% - do -	2.
75-25% sub soil eroded away	3.
25% sub soil and above eroded away	4.
Destroyed land	5.
Gullied land	6.

Slope :

It is expressed as percentage *i. e.* so many feet per 100 feet of land *e. g.* 4% slope means that from a certain point land is depressed or raised by 4 feet per 100 feet. Slope is classified as A, B, C or D etc.

Classification	*Percentage of Slope*	*Grading*
A	0-1%	Nearly even
B	1-3%	Slightly rolling (undulating) Needs little contouring
C	3-8%	Rolling (needs terracing)
D	8-15%	Slightly steep
E	15-25%	Moderately steep
F	25-40%	Steep
G	40% and above	Very steep

Drainage :

It is considered both from upper surface and lower surface. It is classified as follows:

Upper Layer		*Lower Layer*	
1.	Very poorly drained	1.	Very poorly drained
2.	Poorly drained	2.	Poorly drained
3.	Moderately well drained	3.	Moderately well drained
4.	Well drained	4.	Well drained
5.	Excessively drained	5.	Excessively drained
6.	Droughty	6.	Droughty

Soil Surveys :

Soils may be surveyed and classified according to their suitability or otherwise for cultivation and according to the intensity of problems to be encountered on them. For this purpose two types of codes are used for mapping :

1. Their status according to land features viz. effective depth, surface, textile drainage profile of upper layer and lower layer, slope and erosion. Example $\frac{3244}{C-2}$ —starting from the depth above the line 3-denotes effective depth class ; 2 denotes surface texture; 4-drainage condition in the upper layer and 4-drainage in the lower layer. Then below the line C-denotes the slope class and 2-the extent of erosion.

2. Further according to the class of these land features and the intensity of problem arising out of these, soil maps are prepared and the land is given the class of which a particular factor (referred to in the Example) has the maximum problem (the limiting factor). A key to such classification along with the example is given below :

Class	Intensity of Problem	Color with which the class shown in the map	Effective Depth	Surface Texture	Drainage Profile	Per-cent Slope	Ero-sion
I	No problem. Simple management	Green	No. 1 & 2 (36″-60″ & above)	No. 3 medium	No. 4 well drained	A	1
II	Simple problem. Easily handled	Yellow	No. 3 (20″-36″)	2 & 4 (light & heavy)	Modera-tely well drained	B	2
III	A bit difficult prob-lem to handle	Red	—	1 & 6 (v. light & v. heavy)	No. 2 poorly drained	C	3
IV	Quite a difficult problem	Blue	No. 4 (10″-20″)	—	No. 5 (excessive-ly drained)	D	4
V	Normal crops not successful	Dark Green	—	—	No. 1 & 6 (v. p. drained & Droughty)	—	—
VI	Simple management except that normal crops not successful	Orange	No. 5 (less than 10″)	—	—	DE	5
VII	More severe problem. Agr. crops can't grow	Brown	—	—	—	E.F.G.	6
VIII	So severe a problem that no plant can grow on the soil	Purple	—	—	—	—	—

Take the same example $\dfrac{\overset{II}{3}\ \overset{II}{2}\ \ \overset{I}{4}\ \overset{I}{4.}}{\underset{III}{C} - \underset{II}{2}}$ In this effective depth 3 comes under class II, surface texture 2 comes under II, drainage profiles 4 and 4 come under I, slope C under class III and erosion 2 under class II. In this Case the limiting factor is class III or the slope, so the land will be classified as class III land with slope as problem and it will be code worded III (slope). Code words for Erosion—e, Drainage—w, Soil—s. Climate—c.

Five aspects of land management : 1. Erosion. 2. Drainage. 3. Fertility. 4. Structure. 5. Organic matter.

1. *Erosion* : Where there is a profile, erosion may be defined as the movement of soil particles from one place to the other.

Agencies bringing about erosion are water, wind, man and gravity. According to severity of erosion, it is classified into :

(i) Splash erosion - caused by striking of rain drops on the soil surface. It is so important a type that it is estimated that 4″ rain falling in 24 hours has the power to lift 9″ top soil of an acre 36″ high eighty times.

(ii) Sheet erosion—removal of soil particles in sheets (often not identified). (In many cases 50% top soil may be removed).

(iii) Rill erosion—After 50% erosion, there may appear small finger like channels called rills. And the erosion is called rill erosion.

(iv) Serious form of rill erosion is called the Gully erosion. There is another type of erosion called the internal erosion caused by the leaching action of water.

Erosion can be checked considerably by contouring, terracing, mulching, cover cropping, addition of organic matter and grass water ways etc.

2. *Drainage :* It implies disposal of excess water both from upper surface and lower surface of the soil. It has a great bearing on the color of the soil, the fertilizer use and the very basis of crop production. Drainage can be improved by addition of organic matter in heavy soils, digging of open ditches, ponds and tanks, tile digging etc. A great degree of success in any farm planning depends upon efficient drainage. Requisites of a good drainage system are to establish good air and water relationship.

EFFECTS OF FLOODING ON CERTAIN FORAGE CROPS

	Number of days flooded without permanent injury 1†
Alfalfa	10 - 14*
Birdafoot Trefoil	20—30
Bluegrass, Ky.	25 – 35
Bromegrass, Smooth	24 - 28*
Clover, Ladino	10—20
Clover, Red	7—10
Clover, Sweet (Biennial)	9 – 12*
Corn	4—6 (if not over 2″ deep)
Field Brome	20—30
Lespedeza, Korean	5—8 (if not over 4″ deep)
Lespedeza, Sericea	30—40 (in winter, 10 in summer)
Orchard Grass	15—25
Redtop	15 – 35
Reed Canarygrass	49*
Rye	3—6 (except in winter)
Ryegrass	15 – 20 (in winter)
Sorghum, Grain	14 - 28 (Plants over 12″ high) 2†
Soyabeans	5 – 8 (if water is moving)
Tall Fescue	24—35*
Tall Oatgrass	15—20
Timothy	49*
Wheat, oats, barley	3—6
Wheatgrass, crested	10—17*
Wheatgrass, slender	31—35*

* Bolton, J. L. and McKenzie, R. E.—Sci. Agr. Feb. 1946

1† Winter floods on dormant plants will cause less permanent injury than summer floods in warm weather. Similarly, moving water will cause less damage than stagnant water.

2† R. C. Pickett, Assoc. Prof. in Agronomy, Purdue University

Soil Conservation Handbook

3. *Fertility :* Fertility of a soil is defined as the relationship between the elements present in the soil, their availability and the needs of the plants. It is influenced by many factors like soil texture, presence of organic matter, salt content of the soil, percentage of available nutrients and types of agronomic practices practised on a particular land.

(i) *Soil Texture :* As we have already defined the soil texture is the percentage of sand, silt and clay present in a soil. Usually soils having a higher percentage of clay and silt are more fertile. But however we can't bring about any significant change in the texture of a soil.

(ii) *Salt content of the soils :* A soil having high salt content will not be as productive as a soil with normal salt content. Most field crops give best results on lands having normal ph *i.e.* near about 7.0.

(iii) *Percentage of available nutrients :* This is the basic factor affecting the fertility of soil. Fertility status of a soil can be judged from the following table :

Fertility status	*Available N*	*Available P*	*Available K*
High	250 lbs. & above	20 lbs. & above	200 lbs & above
Medium	250-500 lbs.	10-20 lbs.	100-200 lbs.
Low	Upto 250 lbs.	10 lbs. & below	100 lbs. & below

(iv) *Organic matter :* Organic matter is defined as any matter that ever contained life. The active constituent of organic matter is the humus which is a dark reddish brown jelly like substance and product of all bacterial activity. It is the main substance which fixes up nitrogen for use by the plants. Presence of organic matter improves soil texture, structure, tilth and workability, fertility, drainage and permeability. In this connection one important point is to be noted and that is the carbon : nitrogen ratio of various sources of organic matter.

Name of the substance	*C : N Ratio*
Humus	10-12:1
F.Y.M.	20-25:1
Lucern	23:1
Vetch (Guara)	28-30:1
Green rye	36:1
Dry maize stalks	60:1
Wheat green	36:1
Wheat straw	80:1
Dry grass	80:1
Saw Dust	400:1

It may be noted that when any of the materials is either composted or green manured, the excess of carbon above 10-12 parts is simply wasted by way of oxidation and due to lack of

nitrogen to combine with. Therefore it is desirable to add equivalent amount of nitrogen to the material to increase its utility. To cite an example 2 tons of straw with 80 lbs. nitrogen will be equal in organic matter content to 7 tons of compost.

(v) *Agronomic practices :* Some of the agronomic practices are soil building and the others are soil depleting. Their comparative effect is tabulated below :

Soil Depleting Practices	*Factor*	*Soil Building Practices*	*Factor*
1. Growing row crops like Maize, Cotton Potato and Sugar-cane	—2	1. Grass and sod	0.25
		2. Berseem	1.00
2. Cereals like wheat	—1	3. Lucern	2.50
3. Sudan grass etc.	—1.5	4. Green manure	0.5
4. Fallow	—2	5. Cover crops	0.5
		6. Crop residues	0.25
		7. Manure oveton	0.15
		8. 40 lbs. Elemental fertilizer	0.15
		9. Mulch	0.5

In addition to this, soil depletion by erosion also takes place which is as under :

Erosion	*No Practice*	*Contour*	*Strip cropping*
1	0.00	0.00	0.00
2	0.25	0.125	0.00
3	0.50	0.25	0.125
4	1.00	0.75	0.25
5	2.00	1.75	1.00

While assessing total soil depletion, in addition to the figures mentioned above, the figures or erosion should also be included.

In addition to the above enumerated practices the general agronomic practices are use of good seed ; fertilizer ; irrigation ; improved implements ; insecticides ; levelling, cover crop ; organic matter ; crop rotation ; strip cropping ; mulch ; green manure ; minimum tillage ; inoculation ; seed testing ; growing of deep rooted crops and legumes ; sub soiling.

(i) *Good seed and seed testing :* It should be ensured that only pure quality, plump, disease free, weed free and germination tested seed goes to the soil. This accounts for 10-15% increase in production.

(ii) *Fertilizer :* While recommending a fertillizer dose for a crop; soil texture, availability of nutrients (already mentioned), leaching and the most important is the nutrient removal of that crop. Some of the nutrient removal ratios of different crops are as under :

	Crop		*Basis*	*Nitrogen*	*Phosphorus*	*Potash*
1.	Wheat	Grain	1 md.	1.4 lbs.	0.8 lbs.	0.4 lbs.
		Straw	175 lbs.	0.8 ,,	0.3 ,,	2.2 ,,
		Total		2.2 ,,	1.1 ,,	2.6 ,,
2.	Barley	Grain	1 md.	1.5 ,,	0.6 ,,	0.4 ,,
		Straw	140 lbs.	1.0 ,,	0.4 ,,	2.0 ,,
		Total		2.5 ,,	1.0 ,,	2.4 ,,
3.	Lucern	Dry weight	2000 lbs.	50.0 ,,	11.0 ,,	32.0 ,,
4.	Maize	Grain	1 md.	1.4 ,,	0.8 ,,	0.5 ,,
		Straw	165 lbs.	1.8 ,,	0.6 ,,	2.7 ,,
		Total		3.2 ,,	1.4 ,,	3.2 ,,
5.	Cotton	Cotton	1 md.	2.7 ,,	1.0 ,,	1.0 ,,
		Sticks	200 lbs.	2.3 ,,	0.7 ,,	2.5 ,,
		Total		5.0 ,,	1.7 ,,	3.5 ,,
6.	Paddy	Paddy	1 md.	1.0 ,,	0.6 ,,	0.3 ,,
		Straw	163 lbs.	1.0 ,,	0.3 ,,	3.0 ,,
		Total		2.0 ,,	0.9 ,,	3.3 ,,
7.	Groundnut	Nuts	1 md.	2.5 ,,	0.4 ,,	0.4 ,,
		Straw	250 lbs.	1.1 ,,	0.2 ,,	1.7 ,,
		Total		3.6 ,,	0.6 ,,	2.1 ,,
8.	Bajra	Grain	1 md.	1.2 ,,	0.5 ,,	0.8 ,,
		Straw	250 lbs.	1.1 ,,	0.3 ,,	6.6 ,,
		Total		2.3 ,,	0.8 ,,	7.4 ,,
9.	Jowar	Grain	1 md.	1.1 ,,	0.7 ,,	0.6 ,,
		Straw	250 lbs.	1.0 ,,	0.6 ,,	5.3 ,,
		Total		2.1 ,,	1.3 ,,	5.9 ,,
10.	Soyabean	Grain	1 md.	6.0 ,,	2.0 ,,	2.2 ,,
		Straw	170 lbs.	1.0 ,,	0.5 ,,	1.3 ,,
		Total		7.0 ,,	2.5 ,,	3.5 ,,
11.	Sugarcane	Harvest wgt.	2000 lbs.	2.6 ,,	1.6 ,,	7.9 ,,

Soil texture and leaching are interlinked. Heavier the soil and more the organic matter content higher the retention percentage of fertilizers.

(iii) *Irrigation :* Irrigation should be applied to the crops according to their need and the moisture content and water holding capacity of a soil also count much in determining the total water requirements and frequency of irrigation to different crops. Other factors are leaching and evaporation losses and availability of water to plants and proper air and water relationship.

(a) Daily water requirements of some important crops in acre-inches are as under :

Name of the crop	*Daily water requirements in acre inches*	
	Cold Weather 75°F	*Hot Weather 95°*
Grass, Pasture & Forage	0.16"	0.20" ; 0.25"
Potatoes	0.12"	0.14"
Beans, Gram etc.	0.15"	0.20"
Small grain cereals	0.20"	0.22"
Maize, cotton, sugarcane	0.15"	0.20"
Lucern	0.20"	0.25"

(b) Water holding capacity of different soils is as under :

Type of soil	*Water holding capacity of the soil in inches for 1 foot depth*
Light texture	½"—1½" (sandy loam will hold 1½")
Medium texture	1½"—2"
Heavy texture	1¾"—2½"

(c) *Uptake of water by plant roots*

Roots of different plants grow to different depths and the percentage of water utilized by them also varies with the depth.

Name of crop	*Depth of root zone*
1. Grass, Pasture, Forage	1½'—3'
2. Potatoes	2' —4'
3. Beans, gram etc.	2½'—4'
4. Small grain cereals	3' —5'
5. Maize, cotton	4' —5'
6. Sugarcane	6'
7. Lucern	4' —8'

(d) Percentage of water available to the plants in different soils and percentage uptake of water at different depths :

Type of soil	*Percentage of water available to the plants out of the total water holding capacity*
Light	Upto 100%
Medium	80%
Heavy	60%

Depth of the soil	*Percentage water of the total requirement available to the plants*
25%	40%
50%	30%
75%	20%
100%	10%

It is evident from the table that as water goes deeper, it is less and less available to the plants.

(e) Moisture content of the soil available to the plants can roughly be judged from following table :

Available Moisture	*Light Texture*	*Condition of the soil Medium Texture*	*Heavy Texture*
0-25%	Dry, loose, flows through fingers	Powdry dry, sometimes slightly crusted but easily broken	Hard baked cracked and sometimes has loose crumbs on the surface

Available Moisture	*Light Texture*	*Condition of the soil Medium*	*Heavy Texture*
25-50%	Appears dry, will not form Ball	Somewhat crumbly but holds together from pressure	Somwhat liable. Will ball under pressure.
50-75%	Tends to form ball under pressure but seldom stands together	Form ball somewhat plastic, will sometimes slick slightly with pressure	Form ball, will ribbon out between thumb and forefinger
75-100%	Forms weak ball, breaks easily, will not slick	Forms ball which is pliable, slicks readily if relatively high in clay	Easily ribbons out between fingers and has slick feeling.
100%	No free water	No free water	No free water

(f) Evaporation and leaching losses account for about 40% of the total irrigation applied i.e. if we want to make available to the plants 3" of water, we will have to apply 5" deep irrigation.

(g) Formula for frequency of irrigation

$$\frac{\text{Total inches of water held by 4 feet deep soil}}{\text{Daily requrements of the crop}} = \text{Interval of days after which water should be applied}$$

But this interval shows complete exhaustion, therefore irrigation will have to be applied 1-2 days earlier than this interval.

(h) Total water requirements of a crop $= \frac{\text{Duration of the crop}}{\text{Frequency of irrigation}}$ plus

40% evaporation and leaching losses.

(iv) *Improved implements : Minimum tillage and subsoiling :* The implements used for preparing a seed bed should ensure that with their minimum use maximum degree of firmness in the seed bed is achieved i.e. there are no clods and structure of the soil is only slightly destroyed. Keeping in view the depth of root zone of the crops, we should not confine ourselves upto upper 9"—12" top soil, but subsoiling should also be done to break any hard pan and improve drainage and to ensure proper air and water relationship. Similarly levelling is also essential for a good seed bed.

(v) Growing deep rooted crops and legumes; addition of organic matter, crop rotations, strip cropping and green manuring are also important from soil conservation and crop production point of view. Growing of deep rooted crops leave organic matter in the deeper layers of soil by way of root. Green manuring and growing of legumes helps build nitrogen and organic matter content of the soil. In this connection it will be worthwhile to see the comparative effectiveness of various green manure and legume crops by way of addition of nitrogen to the soil when they are ploughed into the soil.

Name of the green manure crop	*lbs. af nitrogen added to the soil per acre*
Sannhemp	75—100 lbs.
Dhaincha	68.9 lbs.
Guara	55.7 lbs.
Senji (whole)	120.1 lbs.
Urad	38.3 lbs.
Moong	34.5 lbs.
Cowpeas	50.3 lbs.
Masar (Lentil)	59.4 lbs.
Bersum	54.2 lbs.
Metha	32.2 lbs.
Senji (cut)	60.0 lbs.

In view of the carbon : nitrogen ratio of different materials, it is advisable to add more nitrogen to the green manure crops to increase their utility. In many cases the green manure crops may not give the expected response due to this very reason.

Crop rotation and strip crop help build soil fertility, check erosion and weeds. Addition of organic matter increases the fertility of soil and improves soil texture, drainage and water holding capacity etc.

Inoculation to legume crops stimulates growth and nitrogen fixation which ultimately leads to soil conservation and high fertility. Cover crop or mulch are two alternatives in contrast to keeping the field fallow. Cover crop checks erosion and also builds up soil fertility. Similarly mulch checks erosion, helps conserve moisture.

4. *Structure :* As already defined it is the arrangement of soil particles. It affects drainage, permeability, tilth and workability and ultimately plant growth. Best type of structure is the granular structure. Structure of a soil can be improved by addition of organic matter and subsoiling etc.

5. *Organic Matter :* As already discussed organic matter determines the fertility of a soil to great extent. It also improves drainage, tilth and workability, water holding capacity etc. It is estimated that 95% of the nitrogen is held by humus-the active content of the organic matter. Organic matter content is very easily lost in light textured soils. It can be added to soil by green manuring, addition of F.Y.M. and crop reisdues etc.

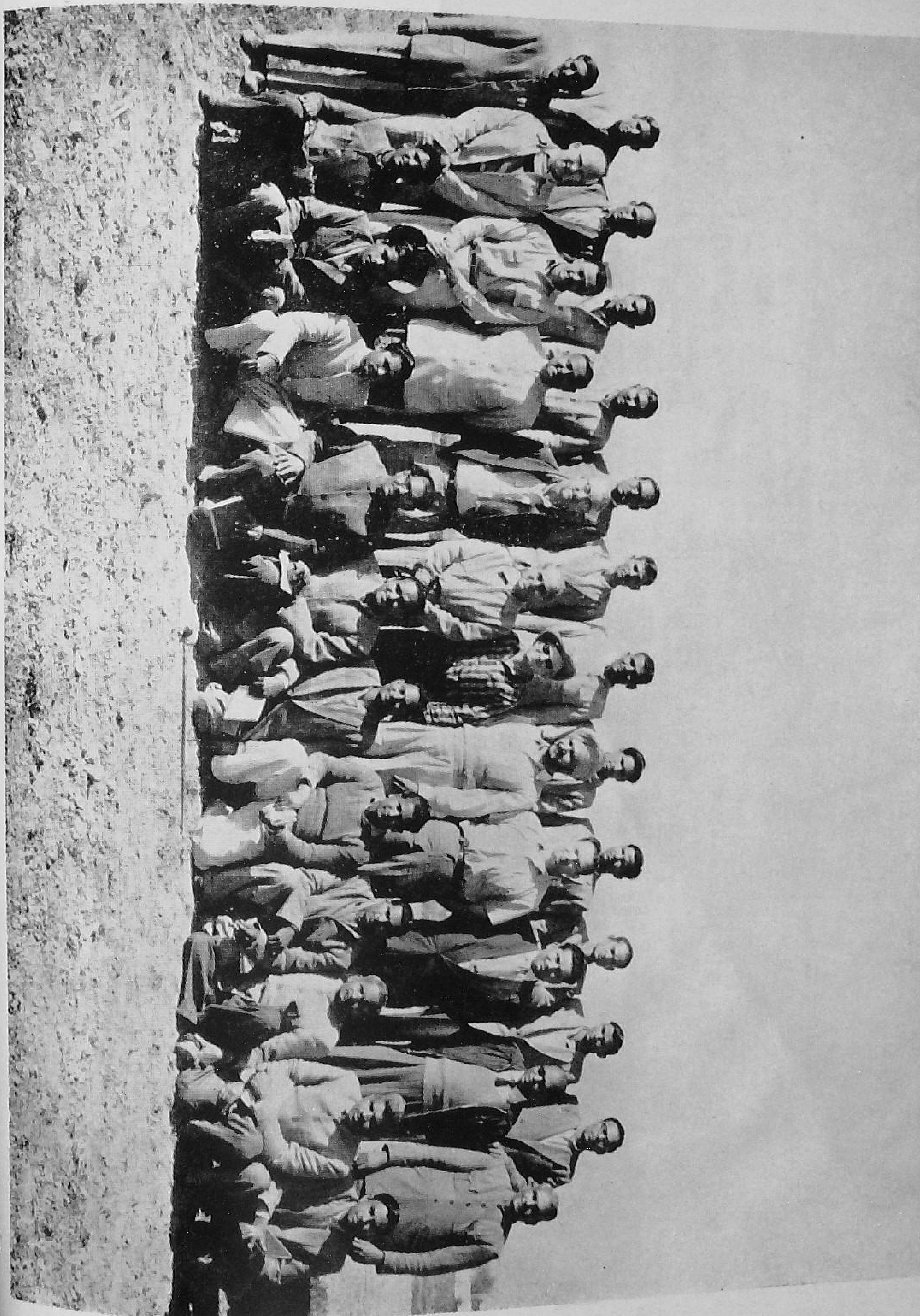

Getting the facts
Sardar Singh and cultivators

Studying a Soil Profile
M. H. Taylor

Hunger Signs in Plants
Myron Smith

Method Demonstration—Seed Germination
Sardar Singh

Infiltration Test
Jack Griffin

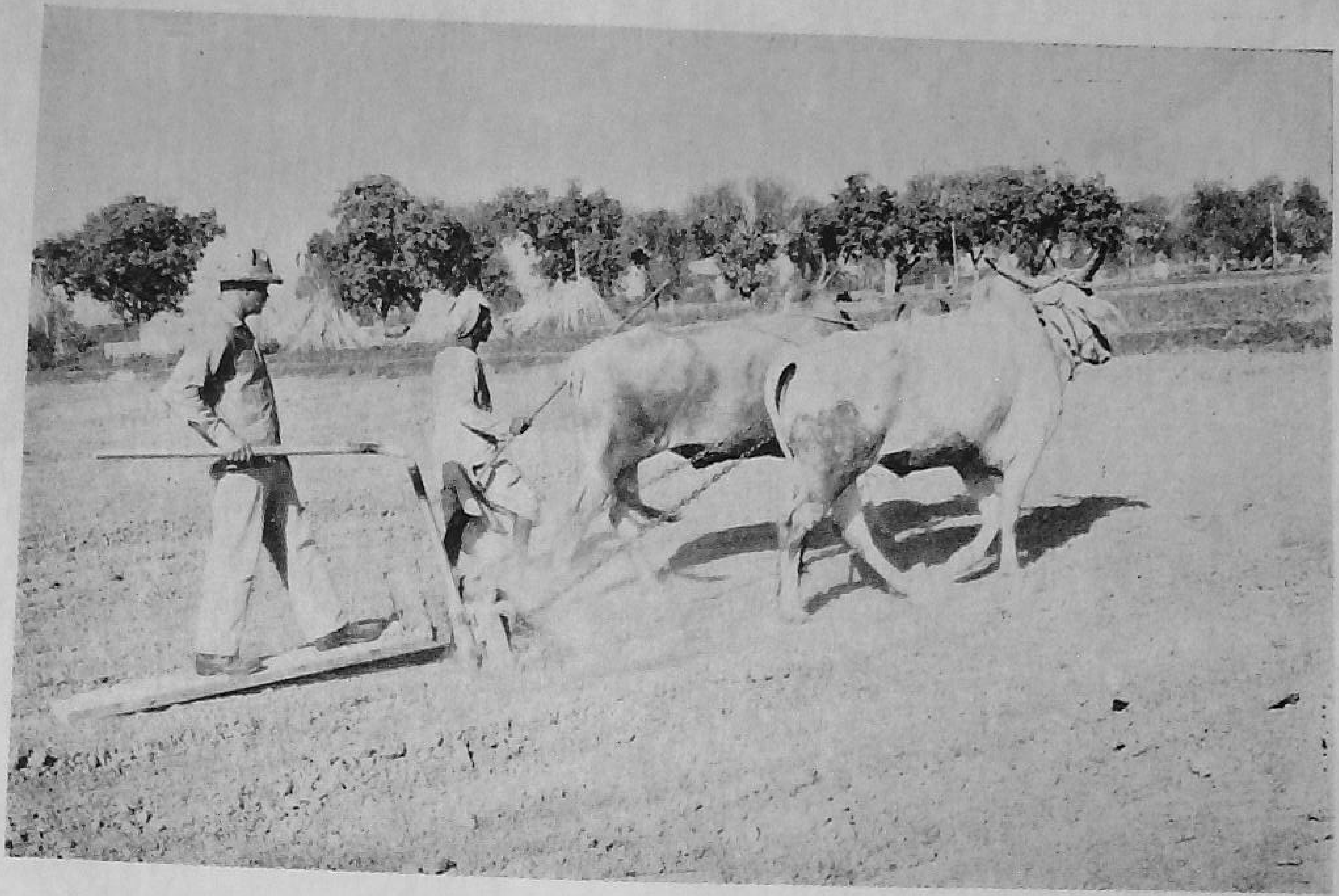

Land Forming
Harold Jones

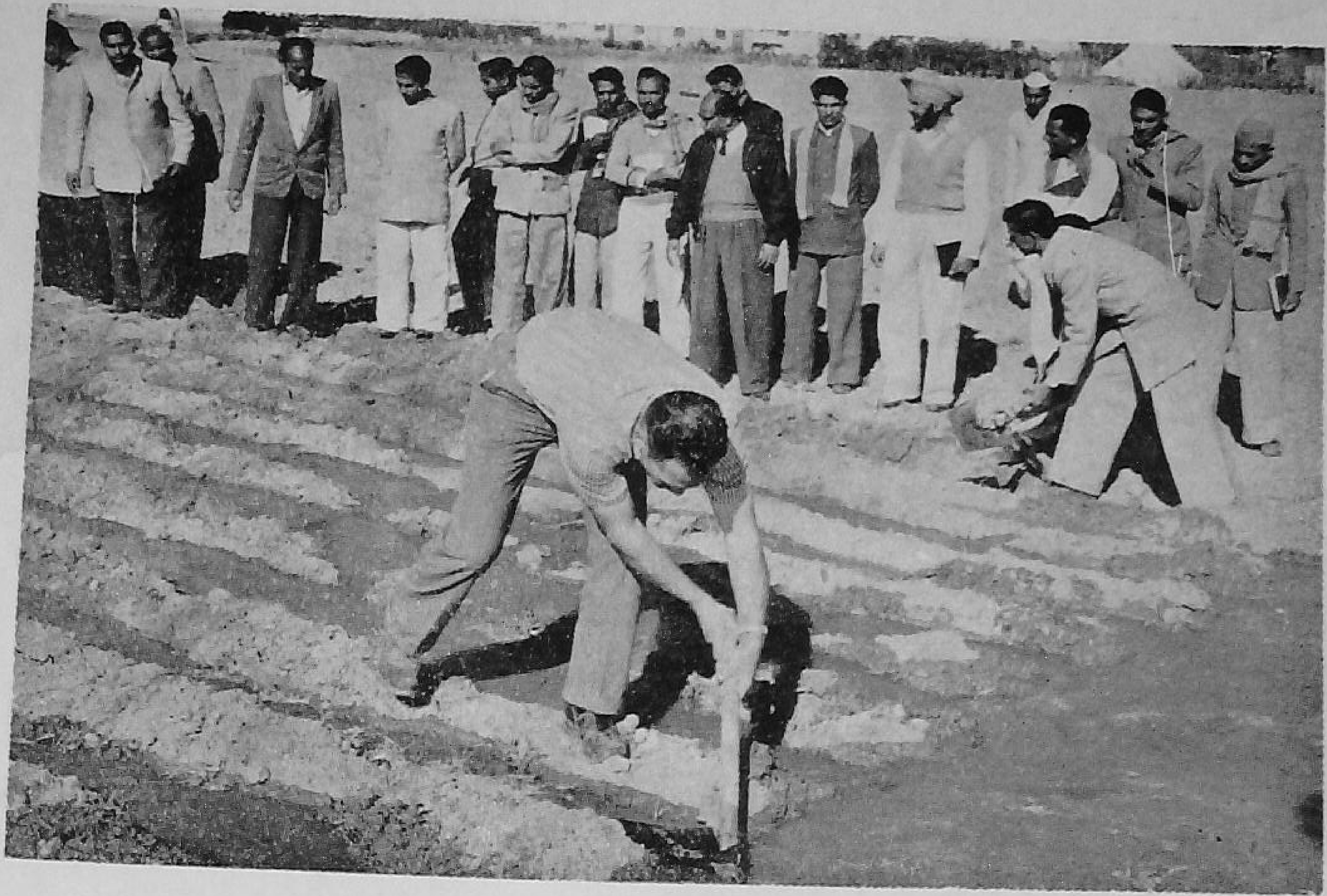

Furrow Irrigation
Don Minehart

8. EVALUATION

In order to assess the impact and evaluate the training programme, the participants were asked on the last day to give their frank opinions and comments under the following heads :

1. How have you been benefited from this training ?
2. To what use would you put this training ?
3. What suggestions do you have for improving this kind of training ?

The following are excerpts from the evaluation reports of the participants :

a. *Benefits received*

"I read in the college and afterwards in books and magazines methods for determination of soil characters, deficiencies, etc., but never had a chance to see with my eyes the practical way to do it." "...the thing which is new and important is that such technical details can be known through simple devices......"

"I believe in what I have been taught here with confidence now."

"I have come to know about the American method of hard and independent working."

"We were told the new improved methods...and we actually saw them also."

"I myself did the experiment of germination of the seeds." "I have also learnt how to give the suggestions to the problems by surveying villages."

"Soil test, auger, leaf test are quite a new thing to me which are very useful in the practical life."

"I never used the auger—only heard the name of this implement. Now I make a use of it as well." "...The idea of irrigation in a controlled way is quite new..." "I could have a very dim light of American teaching methods which proved simple, more beneficial, interesting and more easily understood without cramming everything except few figures, i.e. theoretical than practical..." "Came to know the use of new implements e.g. leveller, scraper, etc."

b. *Application*

"I will demonstrate these methods on the farm to make the trainees capable to learn by doing".

"I will select some villages in the block say one in each village level workers circle as a demonstration and develop them on the lines in which I have been given here..."

"We also go to the villages for extension work and meet the cultivators and we can easily use these methods with the cultivators."

c. *Suggestions for improvement*

"The participants strongly felt that the subject-matter Refresher Courses in future should use the methodology and approach applied in this course to make them purposeful.

"The total period of training of such courses should be increased from one month to two months."

9. ROSTER OF PARTICIPANTS

Subject-matter refresher training of Extension Officers (Agri.) held at the B. R College, Bichpuri from Dec. 17, 1962 to Jan. 16, 1963.

S. No.	*Name*	*Designation*	*Qualification*
1.	B. S. Singh	E.T.O. (Ag.), Pratapgarh	B.Sc. (Ag.)
2.	B. B. J. Sharma	A.D.O. (Ag.), Farrukhabad	Diploma in Ag.
3.	P. S. Sengar	E.T.O. (Ag.), Chirgaon (Jhansi)	B.Sc. (Ag.)
4.	Balraj Singh	E.T.O. (Ag.), Baraut	M.A., B.Sc. (Ag.)
5.	T. S. Shukla	Instructor (Ag.), Lakhaoti	B.Sc. (Ag.)
6.	Harcharan Sharma	A.D.O. (Ag.), Shahjahanpur	Diploma in Ag.
7.	S. R. Singh	A.D.O. (Ag.), Shahjahanpur	,,
8.	Kishan Singh	A.D.O. (Ag.), Etah	,,
9.	H. C. Gupta	A.D.O. (Ag.), Saharanpur	,,
10.	S. S. Kaushik	A.D.O. (Ag.), Hardoi	,,
11.	S. B. Awasthi	Iustructor (Ag.), BKT. Lucknow	,,
12.	J. P. Pandey	A.D.O. (Ag.), Farrukhabad	,,
13.	Shoran Singh	A.D.O. (Ag.), Almora	B.Sc. (Ag.)
14.	B. K. Saxena	E.T.O. (Ag.), Bulandshahr	B.Sc. (Ag.)
15.	M. R. Yadava	A.D.O. (Ag.), Furrukhabad	Diploma in Ag.
16.	M. S. Baglay	A.D.O. (Ag.), Hardoi	,,
17.	B. D. Verma	A.D.O. (Ag.), Sitapnr	,,
18.	Ami Chand	A.D.O. (Ag.), Mathura	,,
19.	Samaya Singh	A.D.O. (Ag.), Pithoragarh	B.Sc. (Ag.)
20.	M. P. Singh	Instructor (Ag.), Mainpuri	B.Sc. (Ag.)
21.	R. S. Bhargava	E.T.O. (Ag.), Rudrapur	M.Sc. (Ag.)
22.	Sahib Singh	A.D.O. (Ag.), Deoria	Diploma in Ag.
23.	L. N. Dubey	Sr. Scientific Asst., Soil Cons. Centre, Agra	

ASSIGNMENT FOR VILLAGE PRACTICALS

I. Group: Village Chohatna

1. Balraj Singh—Group Leader
2. H. C. Gupta
3. B. K. Saxena
4. B. B. L. Sharma
5. Shoran Sing
6. Ami Chand
7. M. S. Baglay

II. Group: Village Nagla Pati Ram

1. Phool Singh Sengar—Group Leader
2. M. P. Singh
3. R. S. Bhargava
4. Krishan Singh Chauhan
5. T. S. Shukla
6. J. P. Pandey
7. Sahab Singh
8. L. N. Dubey

III. Group: Village Bichpuri

1. B. S. Singh—Group Leader
2. H. C. Sharma
3. Sheoraj Singh
4. S. D. Awasthi
5. M. R. Yadava
6. Samaya Singh
7. B. D. Verma
8. Subedar Singh Kaushik

INDIAN OFFICERS CONTRIBUTING

. R. College, Bichpuri

I. J. Singh, Incharge of Course
K. C. Sharma, Soils and Fertilizers
B. R. Tripathi, Soils, Soil Conservation, Irrigation
M. L. Agarwal, Farm Machinery

Extension Training Centre, Bichpuri

S. S. Bhaduaria, Principal
Sardar Singh, ETO, Improved Seeds, etc.
— — Local VLW

Regional Officer, Agra

A. B. Phadke, Asstt. Soil Conservation Officer

Directorate of Extension, MFA, New Delhi

J. C. Ramchandani, Director, Extension Training Unit.
G. S. Baweja, Senior Extension Officer, Extension Training Unit.

USAID Advisors contributing

M. Harrison Taylor, Soil & Water Use Advisor
James E. Crosby, Jr., Extension Advisor
Jack A Griffin, Agricultural Engineer (Irrigation)
Harold M. Jones, Agricultural Equipment Advisor
Donald J. Minehart, Irrigation Farming Advisor
Myron G. Smith, Soils & Fertilizer Advisor

CD: 634

GULABSONS OFFSET WORKS
NEW DELHI